STF | SIRI TECHNO FABS

www.siritech.net

Solar Hybrid Inverter

IOT Enabled 3.5/5.5KW

Table Of Contents

1 ABOUT THIS MANUAL 3

1.1 Purpose 3

1.2 Scope 3

2 SAFETY INSTRUCTIONS 3

3 INTRODUCTION 4

3.1 Features 4

3.2 Basic System Architecture 4

3.3 Product Overview 5

4 INSTALLATION 6

4.1 Unpacking and Inspection 6

4.2 Preparation 6

4.3 Mounting the Unit 7

4.4 Battery Connection 8

4.5 AC Input/Output Connection 10

4.6 PV Connection 12

4.7 Final Assembly 13

4.8 Dry Contact Signal 13

4.9 APP monitor/control 14

5 OPERATION 14

5.1 Power ON/OFF 14

5.2 Operation and Display Panel 15

5.3 LCD Display Icons 16

5.4 LCD Setting 17

5.5 LCD Display 27

5.6 Fault Reference Code 35

5.7 Warning Indicator 35

5.8 BMS communication Warning code reference 36

6 SPECIFICATIONS 37

Table 1 Line Mode Specifications 37

Table 2 Inverter Mode Specifications 38

Table 3 Charge Mode Specifications 39

Table 4 General Specifications 39

8 TROUBLE SHOOTING **40**

9 Appendix Ⅰ: Approximate Back-up Time Table **42**

1 ABOUT THIS MANUAL

1.1 Purpose

This manual describes the assembly, installation, operation and troubleshooting of this unit. Please read this manual carefully before installations and operations. Keep this manual for future reference.

1.2 Scope

This manual provides safety and installation guidelines as well as information on tools and wiring.

2 SAFETY INSTRUCTIONS

⚠ **WARNING: This chapter contains important safety and operating instructions. Read and keep this manual for future reference.**

1. Before using the unit, read all instructions and cautionary markings on the unit, the batteries and all appropriate sections of this manual.
2. **CAUTION** --To reduce risk of injury, charge only deep-cycle lead acid type rechargeable batteries. Other types of batteries may burst, causing personal injury and damage.
3. Do not disassemble the unit. Take it to a qualified service center when service or repair is required. Incorrect re-assembly may result in a risk of electric shock or fire.
4. To reduce risk of electric shock, disconnect all wirings before attempting any maintenance or cleaning. Turning off the unit will not reduce this risk.
5. **CAUTION** – Only qualified personnel can install this device with battery.
6. **NEVER** charge a frozen battery.
7. For optimum operation of this inverter/charger, please follow required spec to select appropriate cable size. It's very important to correctly operate this inverter/charger.
8. Be very cautious when working with metal tools on or around batteries. A potential risk exists to drop a tool to spark or short circuit batteries or other electrical parts and could cause an explosion.
9. Please strictly follow installation procedure when you want to disconnect AC or DC terminals. Please refer to INSTALLATION section of this manual for the details.
10. One piece of 150A fuse is provided as over-current protection for the battery supply.
11. GROUNDING INSTRUCTIONS -This inverter/charger should be connected to a permanent grounded wiring system. Be sure to comply with local requirements and regulation to install this inverter.
12. NEVER cause AC output and DC input short circuited. Do NOT connect to the mains when DC input short circuits.
13. **Warning!!** Only qualified service persons are able to service this device. If errors still persist after following troubleshooting table, please send this inverter/charger back to local dealer or service center for maintenance.

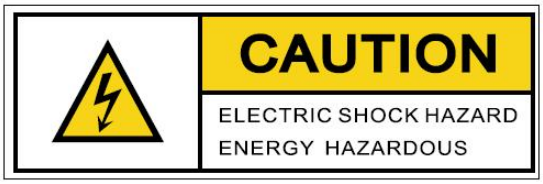

3 INTRODUCTION

This is a multi-function inverter/charger, combining functions of inverter, solar charger and battery charger to offer uninterruptible power support with portable size. Its comprehensive LCD display offers user-configurable and easy-accessible button operation such as battery charging current, AC/solar charger priority, and acceptable input voltage based on different applications.

3.1 Features

- Pure sine wave inverter
- Configurable input voltage range for home appliances and personal computers via LCD setting
- Configurable battery charging current based on applications via LCD setting
- Configurable AC/Solar Charger priority via LCD setting
- Compatible to mains voltage or generator power
- Auto restart while AC is recovering
- Overload/ Over temperature/ short circuit protection
- Smart battery charger design for optimized battery performance
- Cold start function
- Reserved communication ports for BMS（RS485,CAN）
- Built-in Wi-Fi for mobile monitoring(APP is required)

3.2 Basic System Architecture

The following illustration shows basic application for this inverter/charger. It also includes following devices to have a complete running system:

- Generator or Utility.
- PV modules

Consult with your system integrator for other possible system architectures depending on your requirements. This inverter can power all kinds of appliances in home or office environment, including motor-type appliances such as tube light, fan, refrigerator and air conditioner.

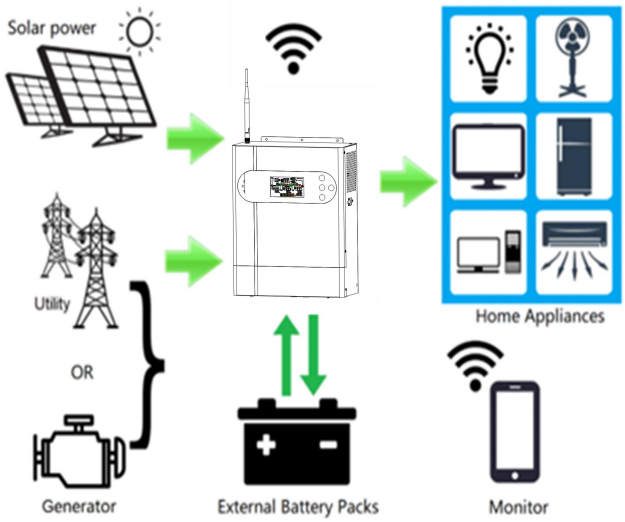

Figure 1 Hybrid Power System

3.3 Product Overview

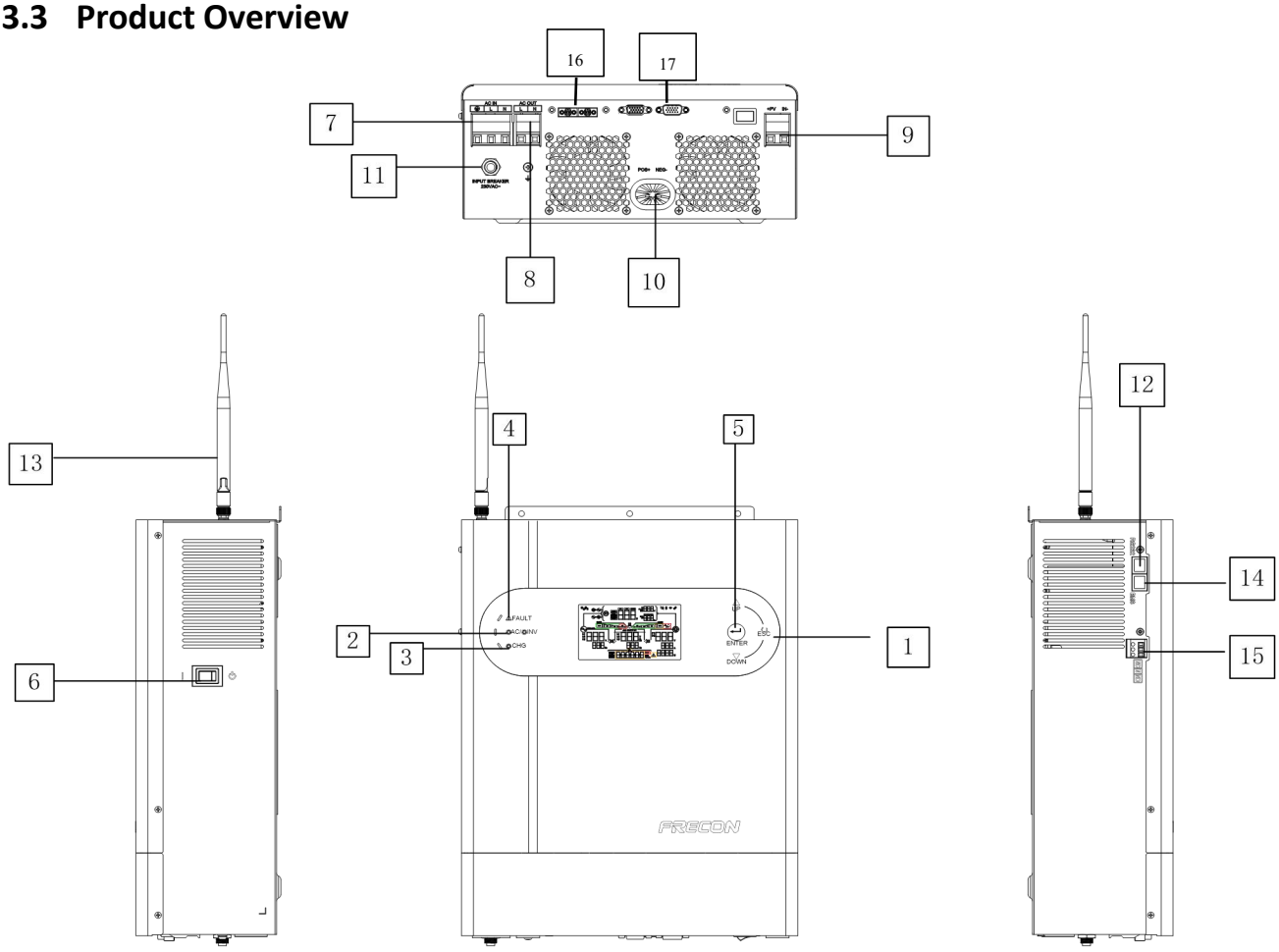

1. LCD display
2. Status indicator
3. Charging indicator
4. Fault indicator
5. Function buttons
6. Power on/off switch
7. AC input
8. AC output
9. PV input
10. Battery input
11. Circuit breaker
12. RS-232 communication port
13. Antenna
14. BMS communication port
15. DRY contact port
16. Current sharing port
17. Parallel communication port

4 INSTALLATION

4.1 Unpacking and Inspection

Before installation, please inspect the unit. Be sure that nothing inside the package is damaged. You should have received the following items inside of package:

- The unit x 1
- User manual x 1
- DC Fuse x 1
- Communication cable x 1
- WiFi antenna x 1

4.2 Preparation

Installing the antenna.

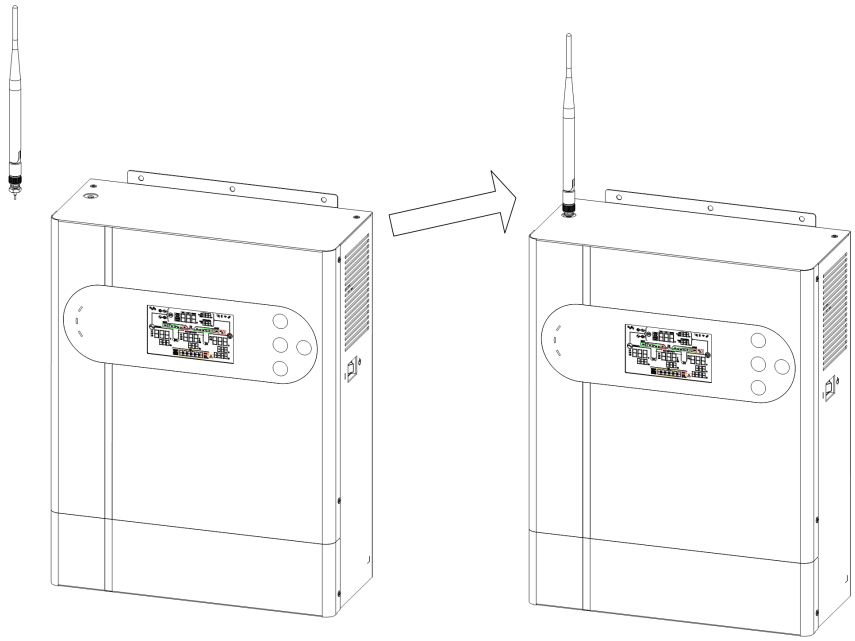

Before connecting all wirings, please take off bottom cover by removing two screws as shown below.

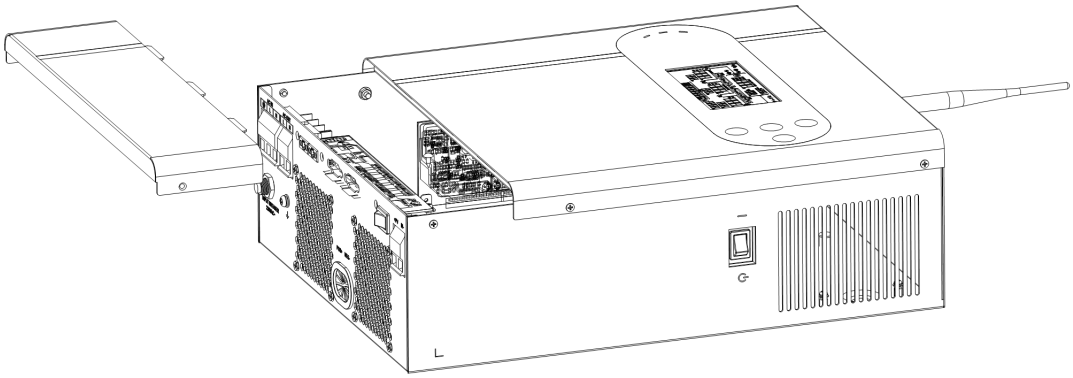

4.3 Mounting the Unit

Consider the following points before selecting where to install:

- Do not mount the inverter on flammable construction materials.
- Mount on a solid surface
- Install this inverter at eye level in order to allow the LCD display to be read at all times.
- For proper air circulation to dissipate heat, allow a clearance of approx 20 cm to the side and approx 50 cm above and below the unit.
- The ambient temperature should be between 0°C and 50°C to ensure optimal operation.
- The recommended installation position is to be adhered to the wall vertically.
- Be sure to keep other objects and surfaces as shown in the diagram to guarantee sufficient heat dissipation and to have enough space for removing wires.

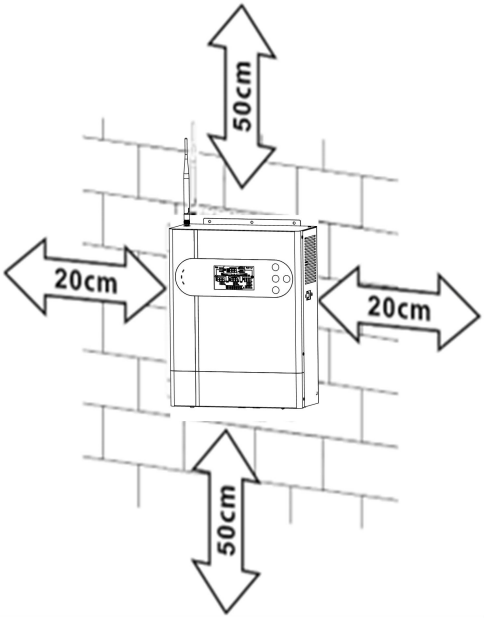

⚠ **SUITABLE FOR MOUNTING ON CONCRETE OR OTHER NON-COMBUSTIBLE SURFACE ONLY.**

Install the unit by screwing 3 screws. It's recommended to use M4 or M5 screws.

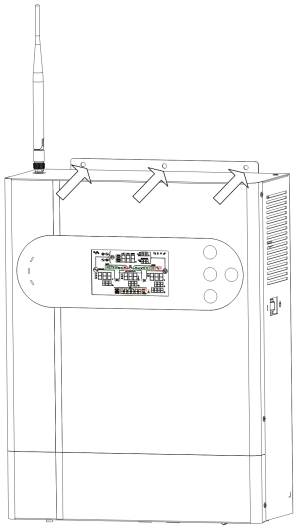

4.4 Battery Connection

CAUTION: For safety operation and regulation compliance, it's requested to install a separate DC over-current protector or disconnect device between battery and inverter. It may not be requested to have a disconnect device in some applications, however, it's still requested to have over-current protection installed. Please refer to typical amperage in below table as required fuse or breaker size.

WARNING! All wiring must be performed by qualified personnel.

WARNING! It's very important for system safety and efficient operation to use appropriate cable for battery connection. To reduce risk of injury, please use the proper recommended cable as below.

Recommended battery cable size:

Model	Wire Size	Cable (mm^2)	Torque value (max)
3.5KW/5.5KW	1 x 2AWG	35	2 Nm

Please follow below steps to implement battery connection:

1. Remove insulation sleeve 18 mm for positive and negative conductors.
2. Suggest to put bootlace ferrules on the end of positive and negative wires with a proper crimping tool.
3. Fix strain relief plate to the inverter by supplied screws as shown in below chart.

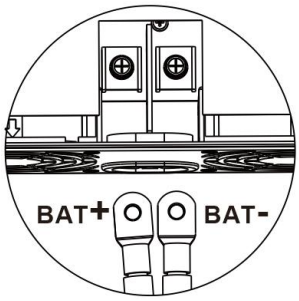

4. Connect all battery packs as below chart.

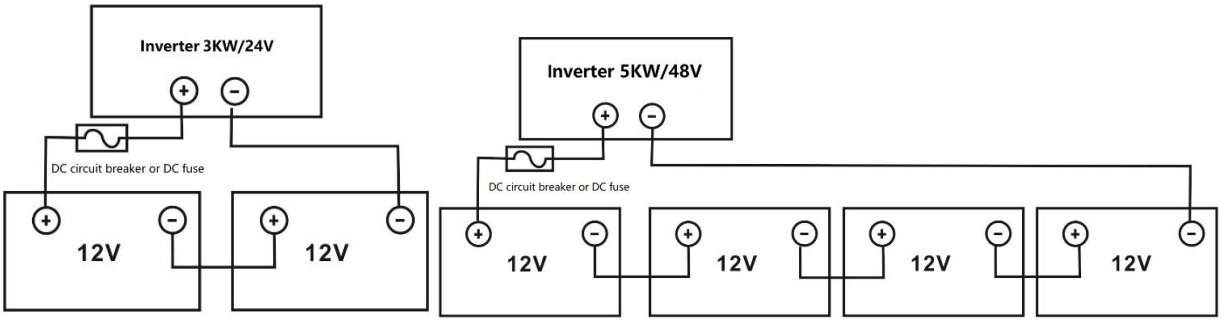

5. Insert the battery wires flatly into battery connectors of inverter and make sure the bolts are tightened with torque of 2 Nm in clockwise direction. Make sure polarity at both the battery and the inverter/charge is correctly connected and conductors are tightly screwed into the battery terminals.

Recommended tool: #2 Pozi Screwdriver

⚠	WARNING: Shock Hazard Installation must be performed with care due to high battery voltage in series.
⚠	CAUTION!! Before making the final DC connection or closing DC breaker/disconnector, be sure positive (+) must be connected to positive (+) and negative (-) must be connected to negative (-).

BMS Communication Connoction

Our machines support BMS communication with batteries.The supported BMS communication protocols are Pylontech and PAC.

Pleas follow below steps to implement BMS communication connection：

1. Connect the end of RJ45 to BMS comunication port(RS485 or CAN) of inverter

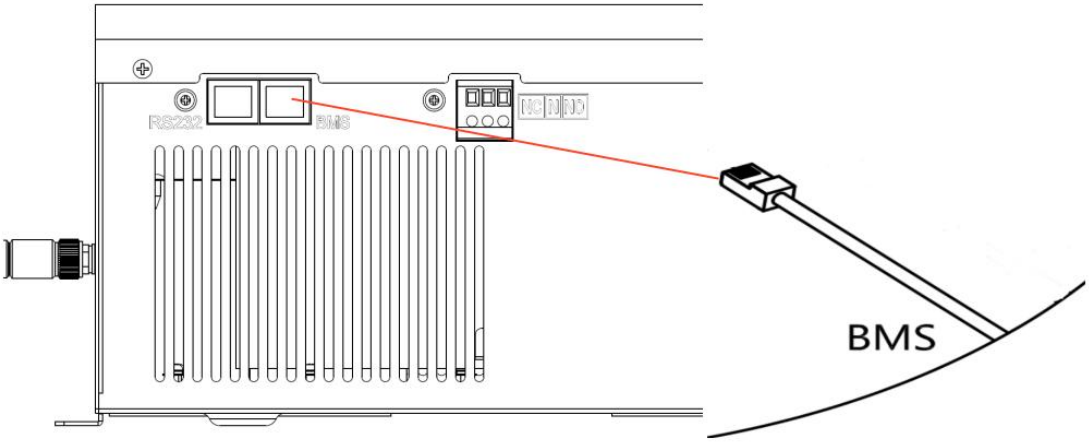

2. The other end of RJ45 insert to battery communication port(RS485 or CAN)

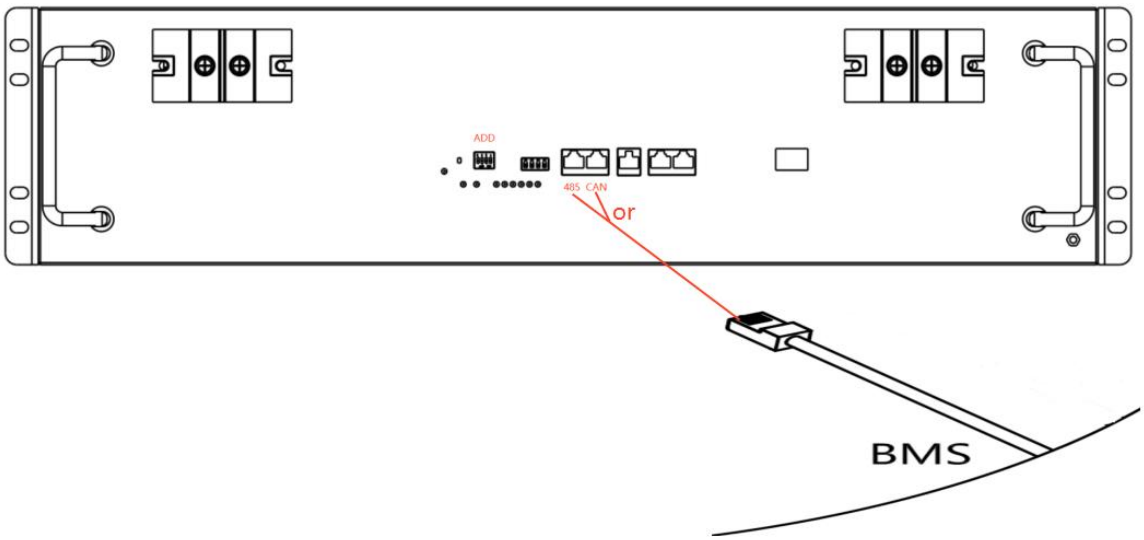

3. If program 38 choose “PAC”,Please seting the address “0000”；If program 38 choose “PYL”,Please seting the address “1000”

NOTE:If you want to use BMS communication; Program 5 must be set to LIB, and then Program 28 should be set according to the protocol supported by the battery

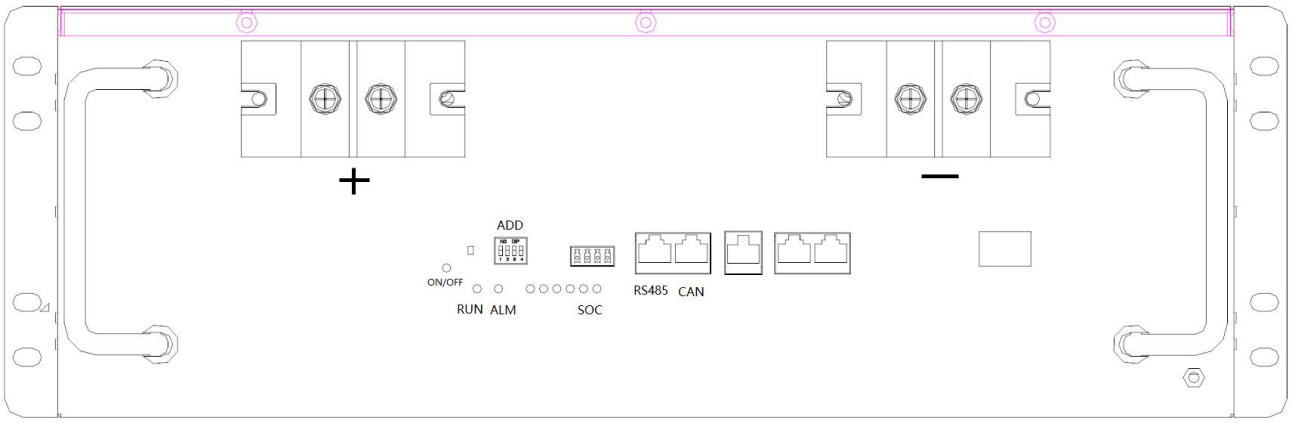

4. In order to communicate with battery BMS,you should set the battery type to "LIb "in program 5.And then set to program 38,which is to set the protocol type.There are several protocols in the inverter.Please get instruction from manufacturer Frencon to choose which protocol to match the BMS

5. Pin Assignment for BMS Communication Port

	Definition
PIN1	RS485B
PIN2	RS485A
PIN3	NC
PIN4	CANL
PIN5	CANH
PIN6	NC
PIN7	NC
PIN8	NC

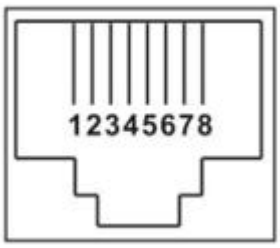

4.5 AC Input/Output Connection

CAUTION!! Before connecting to AC input power source, please install a **separate** AC breaker between inverter and AC input power source. This will ensure the inverter can be securely disconnected during maintenance and fully protected from over current of AC input. The recommended spec of AC breaker is 32A for 3.5KW and 50A for 5.5KW.

CAUTION!! There are two terminal blocks with “IN” and “OUT” markings. Please do NOT mis-connect input and output connectors.

WARNING! All wiring must be performed by a qualified personnel.

WARNING! It's very important for system safety and efficient operation to use appropriate cable for AC input connection. To reduce risk of injury, please use the proper recommended cable size as below.

Suggested cable requirement for AC wires

Model	Gauge	Cable (mm^2)	Torque Value
3.5KW	12 AWG	4	1.2 Nm

5.5KW	10 AWG	6	1.2 Nm

Please follow below steps to implement AC input/output connection:

1. Before making AC input/output connection, be sure to open DC protector or disconnector first.
2. Remove insulation sleeve 10mm for six conductors. And shorten phase L and neutral conductor N 3 mm.
3. Insert AC input wires according to polarities indicated on terminal block and tighten the terminal screws. Be sure to connect PE protective conductor (⏚) first.

   ⏚→**Ground (yellow-green)**
   L→LINE (brown or black)
   N→Neutral (blue)

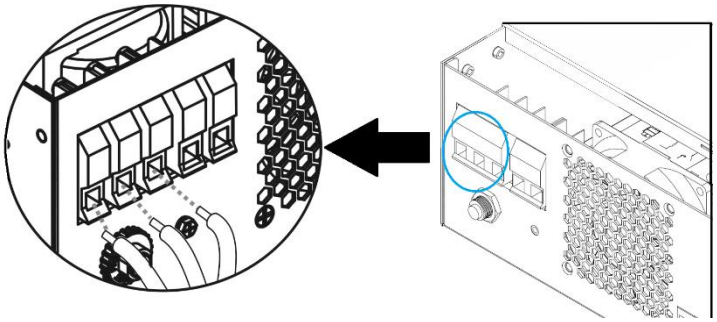

⚠	**WARNING:** Be sure that AC power source is disconnected before attempting to hardwire it to the unit.

4. Then, insert AC output wires according to polarities indicated on terminal block and tighten terminal screws. Be sure to connect PE protective conductor (⏚) first.

   ⏚→**Ground (yellow-green)**
   L→LINE (brown or black)
   N→Neutral (blue)

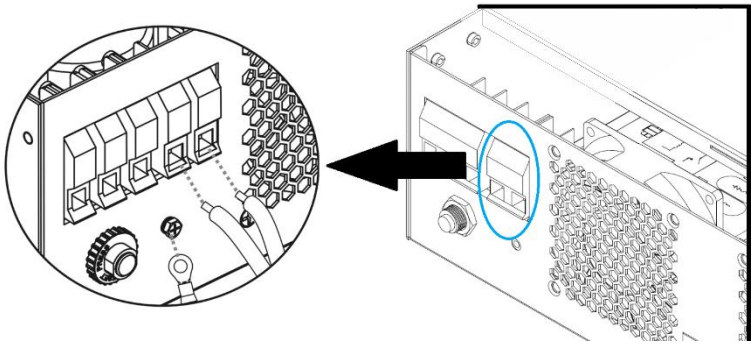

5. Make sure the wires are securely connected.

CAUTION: Appliances such as air conditioner are required at least 2~3 minutes to restart because it's required to have enough time to balance refrigerant gas inside of circuits. If a power shortage occurs and recovers in a short time, it will cause damage to your connected appliances. To prevent this kind of damage, please check manufacturer of air conditioner if it's equipped with time-delay function before installation. Otherwise, this inverter/charger will trig overload fault and cut off output to protect your appliance but sometimes it still causes internal damage to the air conditioner.

4.6 PV Connection

CAUTION: Before connecting to PV modules, please install **separately** a DC circuit breaker between inverter and PV modules.

WARNING! It's very important for system safety and efficient operation to use appropriate cable for PV module connection. To reduce risk of injury, please use the proper recommended cable size as below.

Model	Wire Size	Cable (mm2)	Torque value（max）
3.5KW/5.5KW	1 x 12AWG	4	1.2 Nm

PV Module Selection:

When selecting proper PV modules, please be sure to consider below parameters:

1. Open circuit Voltage (Voc) of PV modules not exceeds max. PV array open circuit voltage of inverter.
2. Open circuit Voltage (Voc) of PV modules should be higher than min. battery voltage.

INVERTER MODEL	3.5KW	5.5KW
Max. PV Array Open Circuit Voltage	500Vdc	
PV Array MPPT Voltage Range	120Vdc~450Vdc	

Take 300Wp PV module as an example. After considering above two parameters, the recommended module configurations are listed as below table.

	SOLAR INPUT (Min in serial: 6 pcs, max. in serial: 11 pcs)	Q'ty of panels	Total input power	Total Voc
Solar Panel Spec. (reference) - 300Wp - Vmp: 34Vdc - Imp: 8.3A - Voc: 42Vdc - Isc: 8.7A	6 pcs in serial	6 pcs	1800W	252 Vdc
	7 pcs in serial	7 pcs	2100W	294 Vdc
	8 pcs in serial	8 pcs	2400W	336 Vdc
	9 pcs in serial	9 pcs	2700W	378 Vdc
	10 pcs in serial	10 pcs	3000W	420 Vdc
	11 pcs in serial	11 pcs	3300W	462 Vdc
	6 pcs in serial and 2 sets in parallel	12 pcs	3600W	252 Vdc
	7 pcs in serial and 2 sets in parallel	14 pcs	4200W	294 Vdc
	8 pcs in serial and 2 sets in parallel	16 pcs	4800W	336 Vdc
	9 pcs in serial and 2 sets in parallel	18 pcs	5400W	378 Vdc
	10 pcs in serial and 2 sets in parallel	20 pcs	6000W	420 Vdc
	11 pcs in serial and 2 sets in parallel	22 pcs	6600W	462 Vdc

Note：The total solar Voltage = Voc* (in serial number) must be ≤ 495Vdc.

PV Module Wire Connection

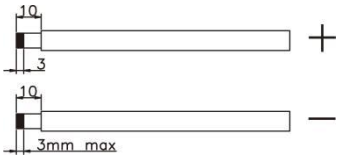

Please follow below steps to implement PV module connection:

1. Remove insulation sleeve 10 mm for positive and negative conductors.
2. Suggest to put bootlace ferrules on the end of positive and negative wires with a proper crimping tool.
3. Fix PV wire cover to the inverter with supplied screws as shown in below chart.

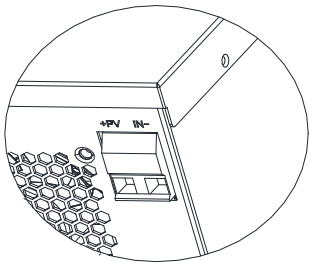

4. Check correct polarity of wire connection from PV modules and PV input connectors. Then, connect positive pole (+) of connection wire to positive pole (+) of PV input connector. Connect negative pole (-) of connection wire to negative pole (-) of PV input connector. Screw two wires tightly in clockwise direction. Recommended tool: 4mm blade screwdriver

4.7 Final Assembly

After connecting all wirings, please put bottom cover back by screwing two screws as shown below.

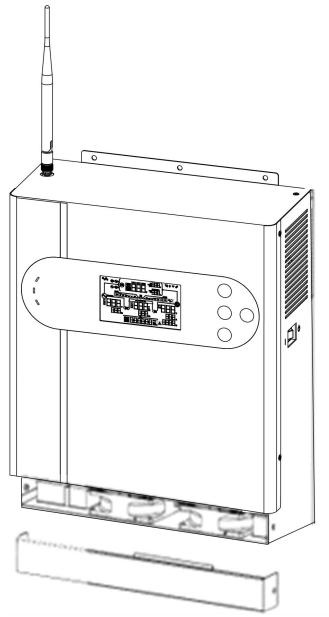

4.8 Dry Contact Signal

There is one dry contact(3A/250VAC) available on the rear panel. It could be used to deliver signal to external device when battery voltage reaches warning level.

Unit Status	Condition			Dry contact port: 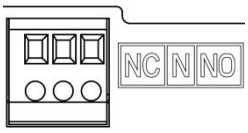	
				NC&N	NO &N
Power Off	Unit is off and no output is powered			Close	Open
Power On	Output is powered from Utility			Close	Open
	Power On powered from Battery or Solar	Close Program 01 set as Utility first	Battery voltage (SOC)<Low DC warning voltage(SOC)	Open	Close
			Battery voltage(SOC)>Setting value in Program 13 or battery charging reaches floating stage	Close	Open
		Program 01 is set as SBU or Solar first	Battery voltage(SOC)<Setting value in Program 12	Open	Close
			Battery voltage (SOC)> Setting value in Program 13 or battery charging reaches floating stage	Close	Open

4.9 APP monitor/control

Scan the QR code, download APP and installed from APP store or web site, and Refer to Installation Guideline to set up network and registering. The inverter status would be shown by mobile phone APP.

5 OPERATION

5.1 Power ON/OFF

Side view of unit

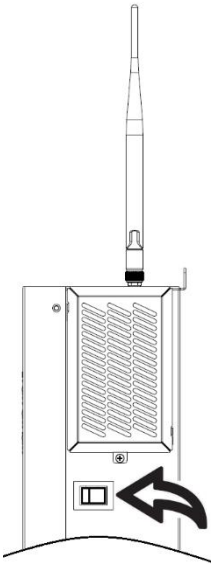

Once the unit has been properly installed and the batteries are connected well, simply press On/Off switch (located on the button of the case) to turn on the unit.

5.2 Operation and Display Panel

The operation and display panel, shown in below chart, is on the front panel of the inverter. It includes three indicators, four function keys and a LCD display, indicating the operating status and input/output power information.

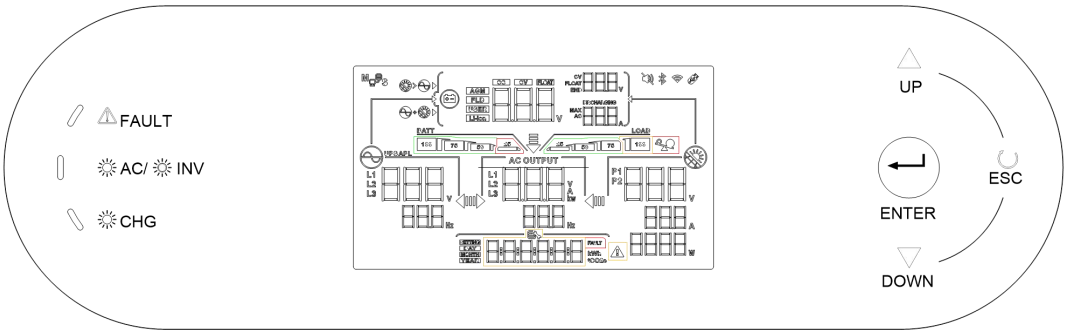

LED Indicator

LED Indicator			Messages
AC / INV	Green	Solid On	Output is powered by utility in Line mode.
		Flashing	Output is powered by battery or PV in battery mode.
CHG	Green	Solid On	Battery is fully charged.
		Flashing	Battery is charging.
FAULT	Red	Solid On	Fault occurs in the inverter.
		Flashing	Warning condition occurs in the inverter.

Function Keys

Function Key	Description
ESC	To exit setting mode
UP	Previous selection
DOWN	Next selection
ENTER	Confirm/enter the selection in setting mode

5.3 LCD Display Icons

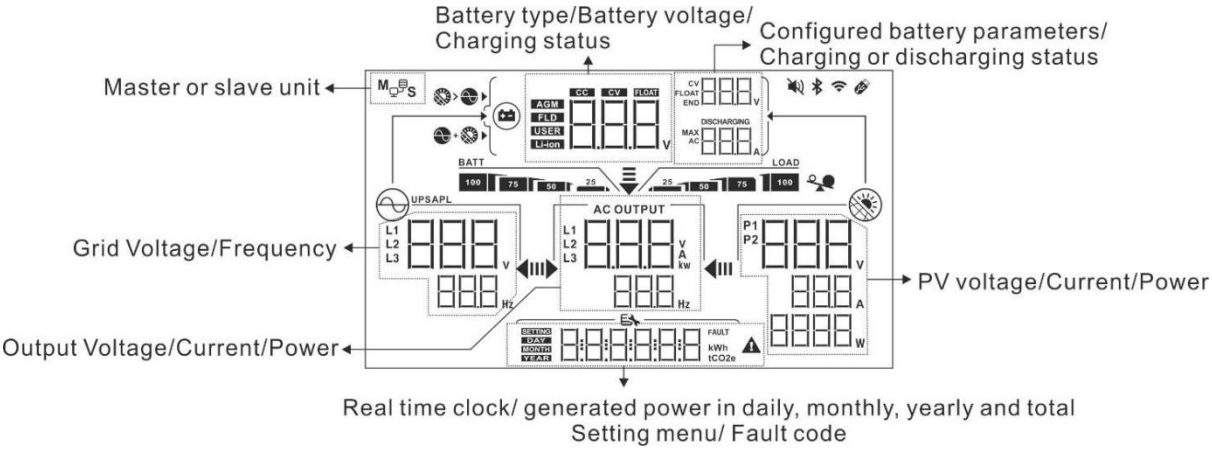

Battery Information	
	Indicates battery level by 0-24%, 25-49%, 50-74% and 75-100% in battery mode and charging status in line mode.

In AC mode, it will present battery charging status.

Status	Battery voltage	LCD Display
Constant Current mode / Constant Voltage mode	<2V/cell	4 bars will flash in turns.
	2 ~ 2.083V/cell	Bottom bar will be on and the other three bars will flash in turns.
	2.083 ~ 2.167V/cell	Bottom two bars will be on and the other two bars will flash in turns.
	> 2.167 V/cell	Bottom three bars will be on and the top bar will flash.
Floating mode. Batteries are fully charged.		4 bars will be on.

In battery mode, it will present battery capacity.

Load Percentage	**Battery Voltage**	**LCD Display**
Load >50%	< 1.85V/cell	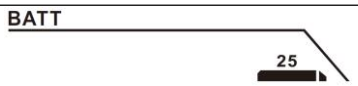
	1.85V/cell ~ 1.933V/cell	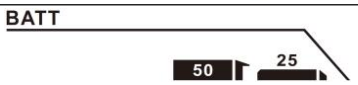
	1.933V/cell ~ 2.017V/cell	
	> 2.017V/cell	
Load < 50%	< 1.892V/cell	
	1.892V/cell ~ 1.975V/cell	
	1.975V/cell ~ 2.058V/cell	
	> 2.058V/cell	

Load Information	
	Indicates overload.
LOAD 25 50 75 100	Indicates the load level by 0-24%, 25-49%, 50-74% and 75-100%.
Charger Source Priority Setting Display	
	Indicates setting program 16 "Charger source priority" is selected as "Solar first".
	Indicates setting program 16 "Charger source priority" is selected as "Solar and Utility".
	Indicates setting program 16 "Charger source priority" is selected as "Solar only".
Output source priority setting display	
	Indicates setting program 01 "Output source priority" is selected as "Utility first"
	Indicates setting program 01 "Output source priority" is selected as "Solar first".
	Indicates setting program 01 "Output source priority" is selected as "SBU".
Mute Operation	
	Indicates unit alarm is disabled.

5.4 LCD Setting

After pressing and holding ENTER button for 3 seconds, the unit will enter setting mode. Press "UP" or "DOWN" button to select setting programs. And then, press "ENTER" button to confirm the selection or ESC button to exit.

Setting Programs:

Program	Description	Selectable option
00	Exit setting mode	Escape 00 SETTING ESC

01	Output source priority: To configure load power source priority	Utility first (default) 01 SETTING UTI	Utility will provide power to the loads as first priority. Solar and battery energy will provide power to the loads only when utility power is not available.
		Solar first 01 SETTING SOL	Solar energy provides power to the loads as first priority. If solar energy is not sufficient to power all connected loads, Utility energy will supply power to the loads at the same time.
		SBU priority 01 SETTING SBU	Solar energy provides power to the loads as first priority. If solar energy is not sufficient to power all connected loads, battery energy will supply power to the loads at the same time. Utility provides power to the loads only when battery voltage drops to either low-level warning voltage or the setting point in program 12.
02	Maximum charging current: To configure total charging current for solar and utility chargers. (Max. charging current = utility charging current + solar charging current)	60A (default) 02 SETTING 60	Setting range is from 10A to 100A. Increment of each click is 10A.
03	AC input voltage range	Appliances (default) 03 SETTING APL	If selected, acceptable AC input voltage range will be within 90-280VAC.
		UPS 03 SETTING UPS	If selected, acceptable AC input voltage range will be within 170-280VAC.

05	Battery type	AGM (default) 05 SETTING AGn	Flooded 05 SETTING FLd
		User-Defined 05 SETTING USE	If “User-Defined” is selected, battery charge voltage and low DC cut-off voltage can be set up in program 26, 27 and 29.
		Lithium 05 SETTING LIb	Only suitable when communicated with BMS；When [05] setting item =Lithium , [38] setting item select the corresponding lithium battery manufacturer brand for communication
		User-Defined 2 05 SETTING US2	Suitable when lithium battery without BMS communication；If "User-Defined 2" is selected, battery charge voltage and low DC cut-off voltage can be set up in program 19, 20 and 21.It is recommended to set to the same voltage in program 19 and 20(full charging voltage point of lithium battery).The inverter will stop charging when the battery voltage reaches this setting.
06	Auto restart when overload occurs	Restart disable (default) 06 SETTING LrD	Restart enable 06 SETTING LrE

07	Auto restart when over temperature occurs	Restart disable (default) 07 SETTING tRd	Restart enable 07 SETTING tRE
09	Output frequency	50Hz (default) 09 SETTING 50	60Hz 09 SETTING 60
10	Output voltage	220V 10 SETTING 220	230V (default) 10 SETTING 230
		240V 10 SETTING 240	
11	Maximum utility charging current Note: If setting value in program 02 is smaller than that in program in 11, the inverter will apply charging current from program 02 for utility charger.	30A(default) 11 SETTING 30	Setting range is 2A, then from 10A to 80A. Increment of each click is 10A.

12	Setting voltage point back to utility source when selecting "SBU priority" or "Solar first" in program 01.	Available options in 3.5KVA model:	
		23.0V (default) 12 SETTING 23.0	Setting range is from 22V to 25.5V. Increment of each click is 0.5V.
		Available options in 5.5KVA model:	
		46V (default) 12 SETTING 46	Setting range is from 44V to 51V. Increment of each click is 1V.
13	Setting voltage point back to battery mode when selecting "SBU priority" or "Solar first" in program 01.	Available options in 3.5KVA model:	
		Battery fully changed 13 SETTING FUL	27V (default) 13 SETTING 27.0
		Setting range is from 24V to 29V.Increment of each click is 0.5V.	
		Available options in 5.5KVA model:	
		Battery fully changed 13 SETTING FUL	54V (default) 13 SETTING 54
		Setting range is from 48V to 58V.Increment of each click is 1V.	

16	Charger source priority: To configure charger source priority	If this inverter/charger is working in Line, Standby or Fault mode, charger source can be programmed as below:	
		Utility first 16 SETTING CUt	Utility will charge battery as first priority. Solar energy will charge battery only when utility power is not available.
		Solar first 13 SETTING CSO	Solar energy will charge battery as first priority. Utility will charge battery only when solar energy is not available.
		Solar and Utility (default) 13 SETTING SNU	Solar energy and utility will charge battery at the same time.
		Only Solar 13 SETTING OSO	Solar energy will be the only charger source no matter utility is available or not.
		If this inverter/charger is working in Battery mode, only solar energy can charge battery. Solar energy will charge battery if it's available and sufficient.	
18	Alarm control	Alarm on (default) 18 SETTING bON	Alarm off 13 SETTING bOF

19	Auto return to default display screen	Return to default display screen (default) 19 SETTING ESP	If selected, no matter how users switch display screen, it will automatically return to default display screen (Input voltage /output voltage) after no button is pressed for 1 minute.
		Stay at latest screen 19 SETTING FEP	If selected, the display screen will stay at latest screen user finally switches.
20	Backlight control	Backlight on (default) 20 SETTING LON	Backlight off 20 SETTING LOF
22	Beeps while primary source is interrupted	Alarm on (default) 22 SETTING AON	Alarm off 22 SETTING AOF
23	Overload bypass: When enabled, the unit will transfer to line mode if overload occurs in battery mode.	Bypass disable (default) 23 SETTING byd	Bypass enable 23 SETTING byE

25	Record Fault code	Record enable (default) 25 SETTING FEn	Record disable 25 SETTING Fds
26	Bulk charging voltage (C.V voltage)	3.5KVA default setting: 28.2V 26 SETTING CV28.2	
		5.5KVA default setting: 56.4V 26 SETTING CV56.4	
		If self-defined is selected in program 5, this program can be set up. Setting range is from 25.0V to 31.5V for 3.5KVA model and 48.0V to 61.0V for 5.5KVA model. Increment of each click is 0.1V.	
27	Floating charging voltage	3.5KVA default setting: 27.0V 27 SETTING FLV27.0	
		5.5KVA default setting: 54.0V 27 SETTING FLV54.0	
		If self-defined is selected in program 5, this program can be set up. Setting range is from 25.0V to 31.5V for 3.5KVA model and 48.0V to 61.0V for 5.5KVA model. Increment of each click is 0.1V.	

28	AC output mode *This setting is only available when the inverter is in standby mode (Switch off).	Single: This inverter is used in single phase application. 28 SETTING SIG	Parallel: This inverter is operated in parallel system. 28 SETTING PAL
29	Low DC cut-off voltage	3.5KVA default setting: 21.0V 29 SETTING CUT 21.0	
		5.5KVA default setting: 42.0V 29 SETTING CUT 42.0	
		If self-defined is selected in program 5, this program can be set up. Setting range is from 21.0V to 24.0V for 3.5KVA model and 42.0V to 48.0V for 5.5KVA model. Increment of each click is 0.1V. Low DC cut-off voltage will be fixed to setting value no matter what percentage of load is connected.	
30	Battery equalization	Battery equalization 30 SETTING EEN	Battery equalization disable (default) 30 SETTING EdS
		If "Flooded" or "User-Defined" is selected in program 05, this program can be set up.	

31	Battery equalization voltage	3.5KVA default setting: 29.2V 31 SETTING EV29.2	
		5.5KVA default setting: 58.4V 31 SETTING EV58.4	
		Setting range is from 25.0V to 31.5V for 3.5KVA model and 48.0V to 61.0V for 5.5KVA model. Increment of each click is 0.1V.	
33	Battery equalized time	60min (default) 33 SETTING 60	Setting range is from 5min to 900min. Increment of each click is 5min.
34	Battery equalized timeout	120min (default) 34 SETTING 120	Setting range is from 5min to 900 min. Increment of each click is 5 min.
35	Equalization interval	30days (default) 35 SETTING 30d	Setting range is from 0 to 90 days. Increment of each click is 1 day
36	Equalization activated immediately	Enable 36 SETTING AEN	Disable (default) 36 SETTING Ads

		If equalization function is enabled in program 30, this program can be set up. If "Enable" is selected in this program, it's to activate battery equalization immediately and LCD main page will shows " E9". If "Disable" is selected, it will cancel equalization function until next activated equalization time arrives based on program 35 setting. At this time, "E9" will not be shown in LCD main page.	
37	WiFi Reset	Default 37 SETTING dEF	Reset 37 SETTING rSt
		After WiFi module reset，the inverter should be disconnected from the router，need WiFi configuration again.	
38	BMS communication	Pylontech（派能）Default 38 SETTING PYL	PAC（沛城） 38 SETTING PAC

5.5 LCD Display

The LCD display information will be switched in turns by pressing "UP" or "DOWN" key. The selectable information is switched as below order: input voltage, input frequency, PV voltage, charging current, charging power, battery voltage, output voltage, output frequency, load percentage, load in Watt, load in VA, load in Watt, DC discharging current, main CPU Version.

Selectable information	LCD display
Grid Voltage/Frequency Output Voltage/Frequency PV Voltage/Current/Power Battery Voltage Charge Current Bulk charging voltage Main CPU Version< (Default Display Screen)	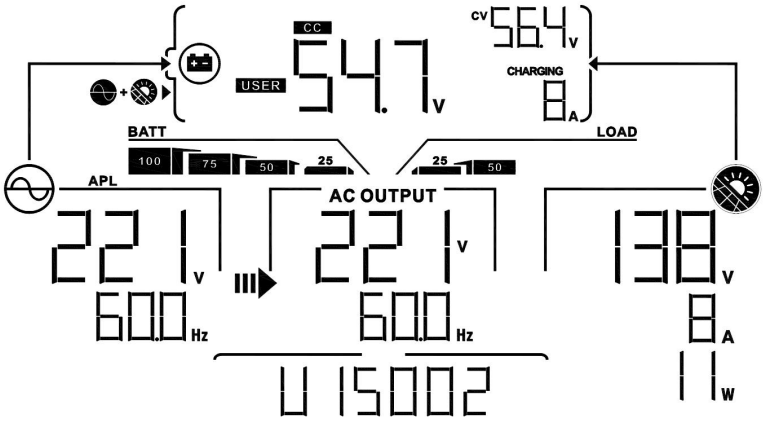

Load in VA	Load=1.94VA 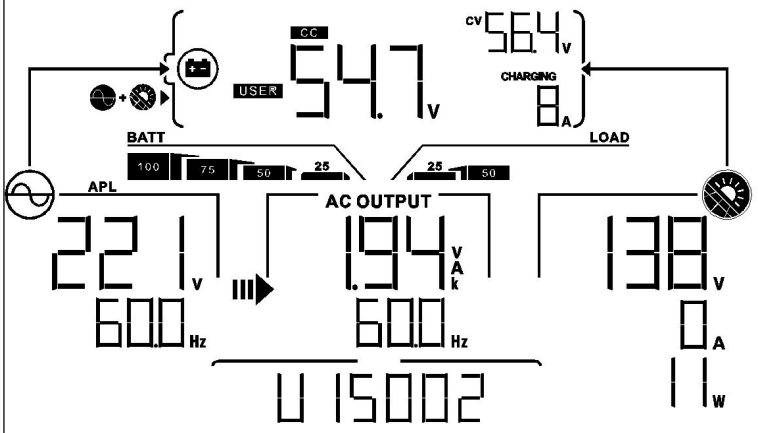
Load in Watt	Load=1.91W 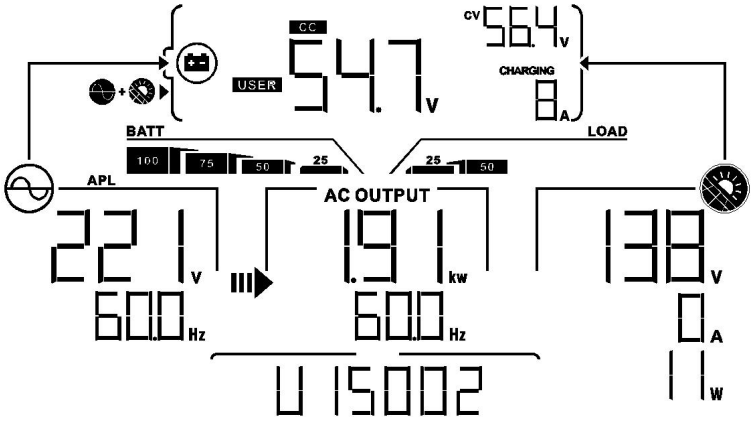
DC discharging current	discharging current = 46.3A 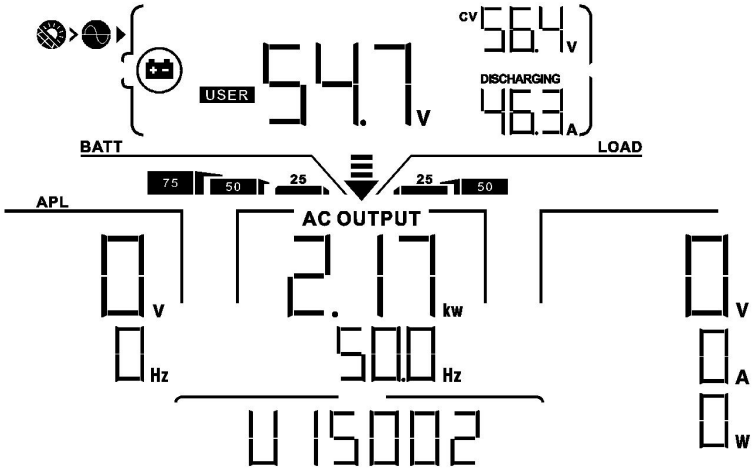

Floating charging voltage	Floating voltage = 55.6V 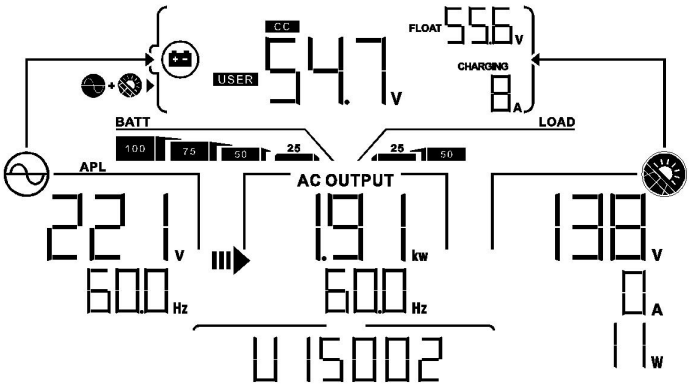
Low DC cut-off voltage	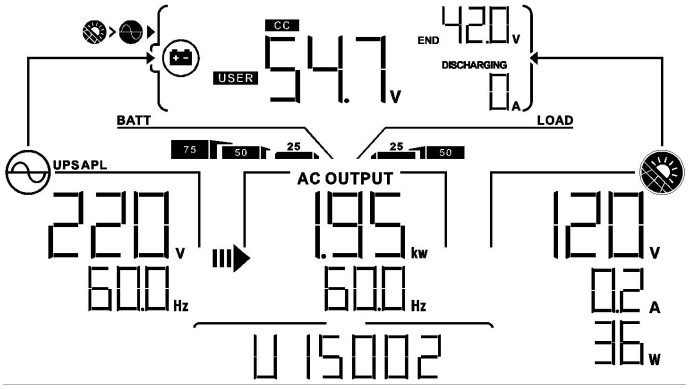
Max charging current	Max charging current=60A 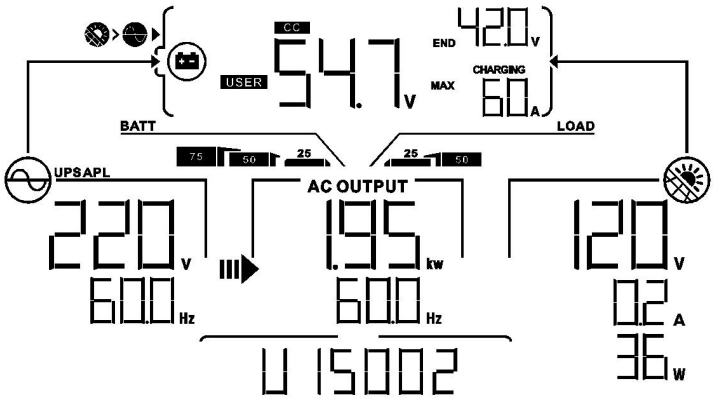
Max AC charging current	Max AC charging current=10A 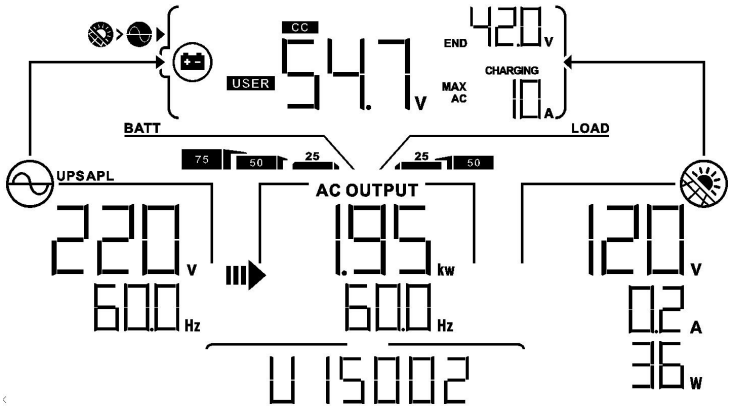

Operating Mode Description

Operation mode	Description	LCD display
Standby mode Note: *Standby mode: The inverter is not turned on yet but at this time, the inverter can charge battery without AC output.	No output is supplied by the unit but it still can charge batteries.	Charging by utility and PV energy 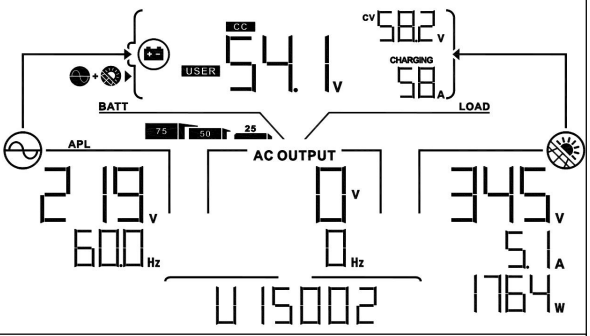
		Charging by utility 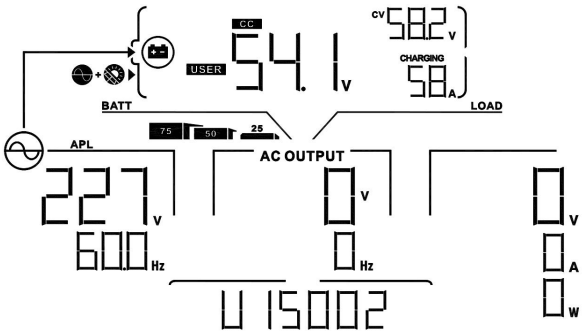
		Charging by PV energy. 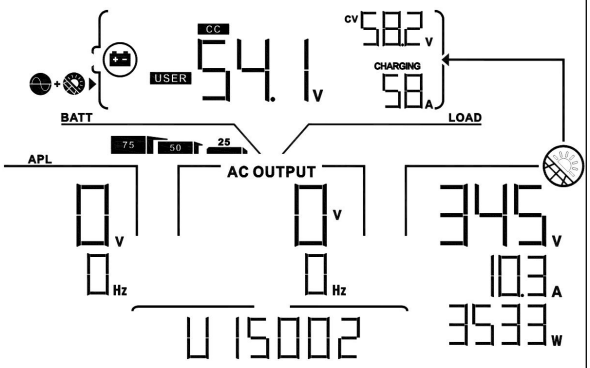
Fault mode Note: *Fault mode: Errors are caused by inside circuit error or external reasons such as over temperature, output short circuited and so on.	No output, no charging.	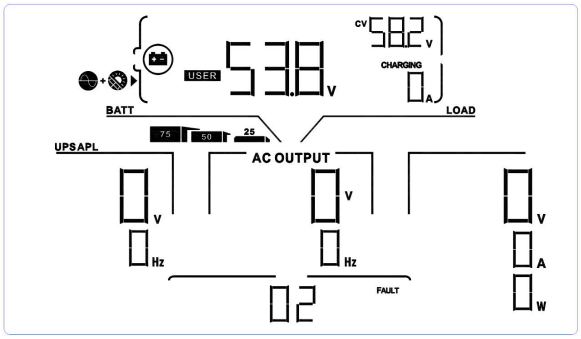

Line Mode	The unit will provide output power from the mains. It will also charge the battery at line mode.	Charging by utility and PV energy. 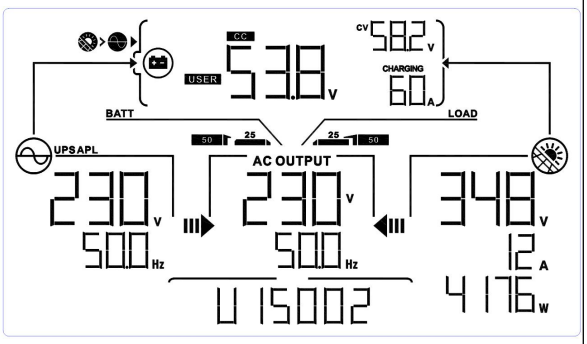
	The unit will provide output power from the mains. It will also charge the battery at line mode.	Charging by utility. 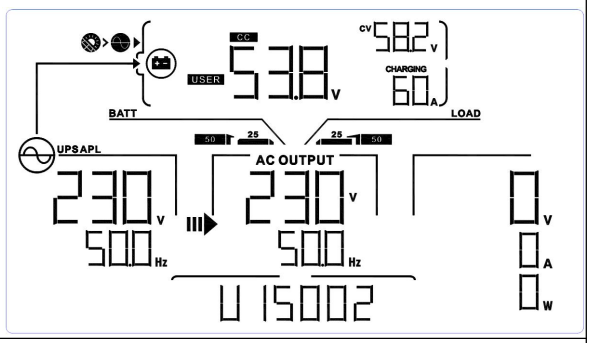
	The unit will provide output power from the mains. It will also charge the battery at line mode.	If "solar first" is selected as output source priority and solar energy is not sufficient to provide the load, solar energy and the utility will provide the loads and charge the battery at the same time 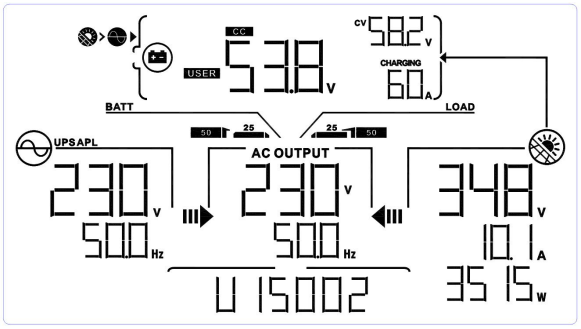
		If "solar first" is selected as output source priority and battery is not connected, solar energy and the utility will provide the loads 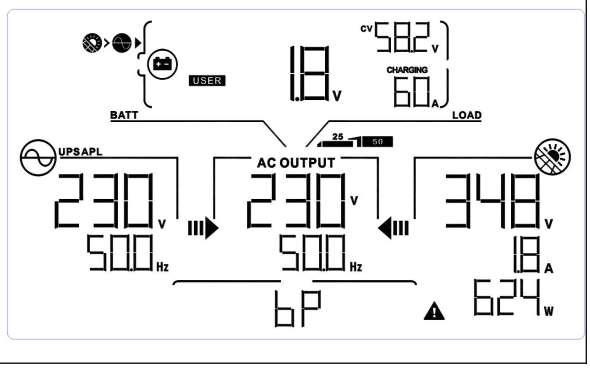

Line Mode	The unit will provide output power from the mains. It will also charge the battery at line mode.	Power from utility. 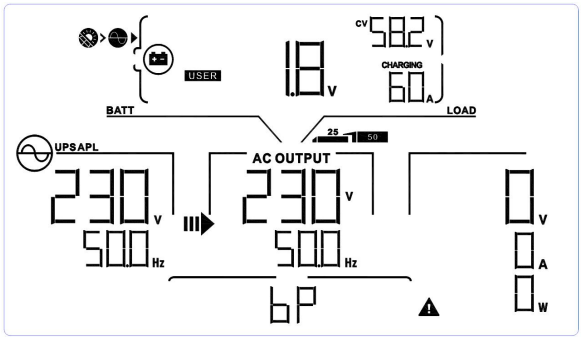
Battery Mode	The unit will provide output power from battery and PV power.	Power from battery and PV energy 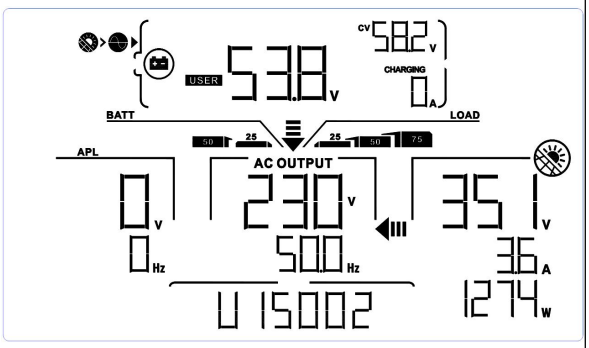
		PV energy will supply power to the loads and charge battery at the same time 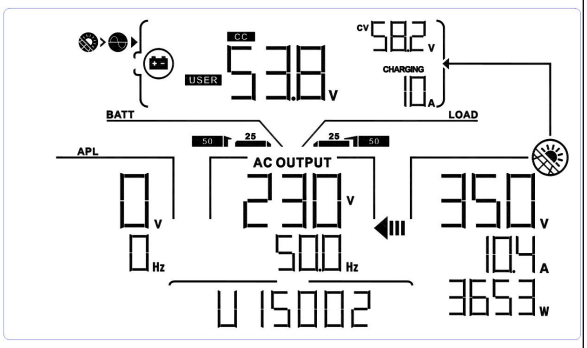
		Power from battery only

		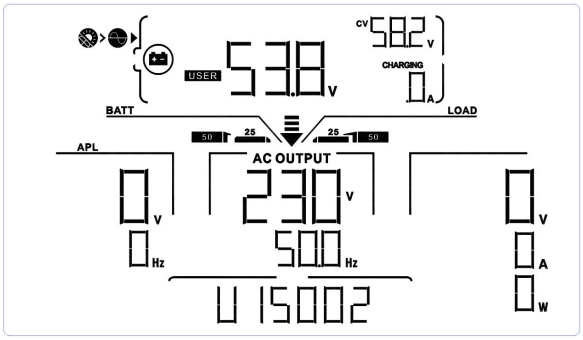
Battery Mode	The unit will provide output power from battery and PV power.	Power from PV energy only 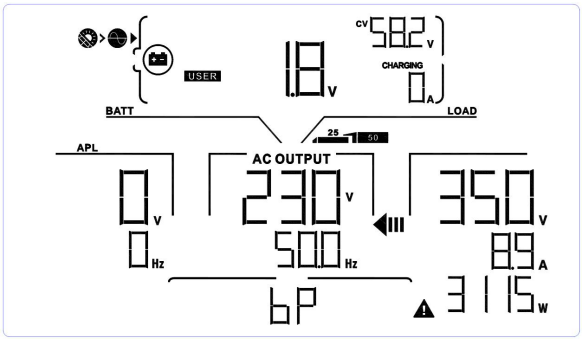

Battery Equalization Description

Equalization function is added into charge controller. It reverses the buildup of negative chemical effects like stratification, a condition where acid concentration is greater at the bottom of the battery than at the top. Equalization also helps to remove sulfate crystals that might have built up on the plates. If left unchecked, this condition, called sulfation, will reduce the overall capacity of the battery. Therefore, it's recommended to equalize battery periodically.

How to Apply Equalization Function

You must enable battery equalization function in monitoring LCD setting program 30 first. Then, you may apply this function in device by either one of following methods:

1. Setting equalization interval in program 35.
2. Active equalization immediately in program 36.

When to Equalize

In float stage, when the setting equalization interval (battery equalization cycle) is arrived, or equalization is active immediately, the controller will start to enter Equalize stage.

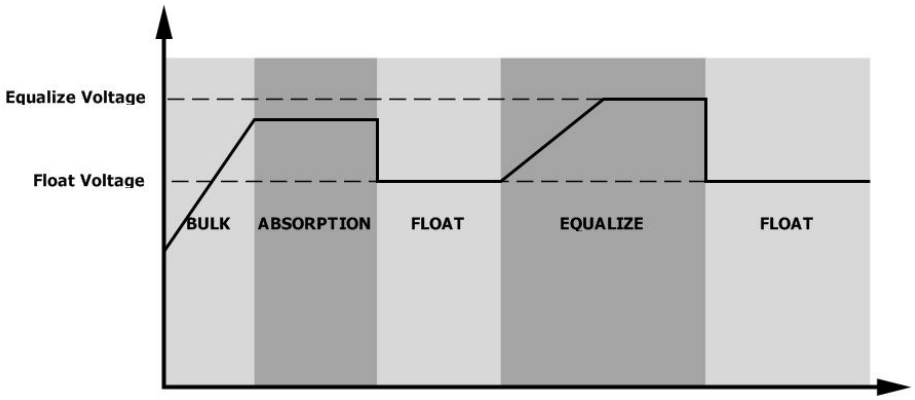

Equalize charging time and timeout

In Equalize stage, the controller will supply power to charge battery as much as possible until battery voltage raises to battery equalization voltage. Then, constant-voltage regulation is applied to maintain battery voltage at the battery equalization voltage. The battery will remain in the Equalize stage until setting battery equalized time is arrived.

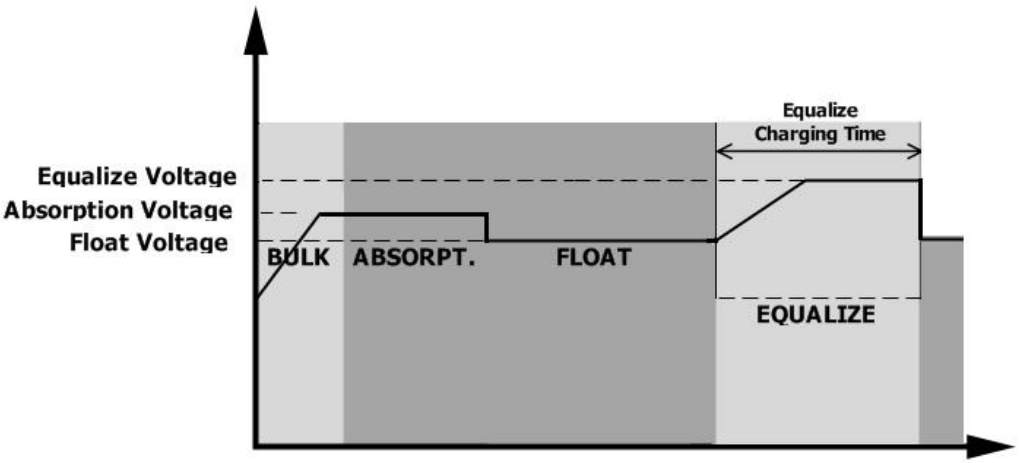

However, in Equalize stage, when battery equalized time is expired and battery voltage doesn't rise to battery equalization voltage point, the charge controller will extend the battery equalized time until battery voltage achieves battery equalization voltage. If battery voltage is still lower than battery equalization voltage when battery equalized timeout setting is over, the charge controller will stop equalization and return to float stage.

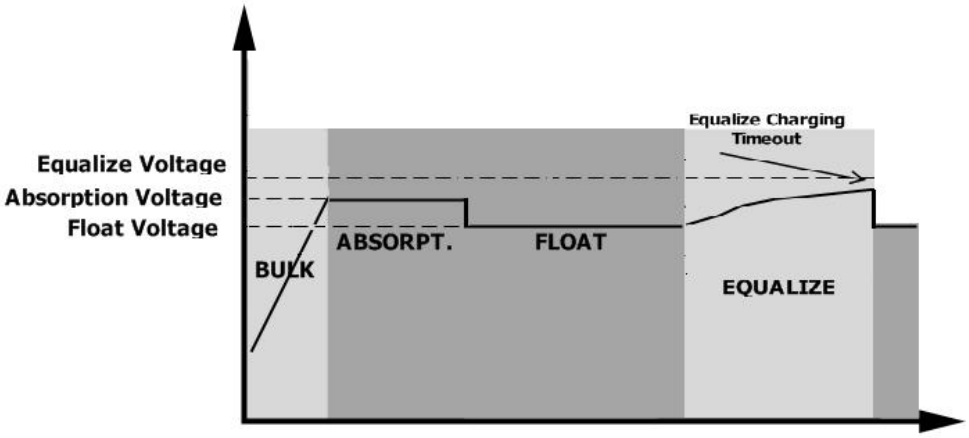

5.6 Fault Reference Code

Fault Code	Fault Event	Icon on
01	Fan is locked when inverter is off.	01 FAULT
02	Over temperature	02 FAULT
03	Battery voltage is too high	03 FAULT
04	Battery voltage is too low	04 FAULT
05	Output short circuited or over temperature is detected by internal converter components.	05 FAULT
06	Output voltage is too high.	06 FAULT
07	Overload time out	07 FAULT
08	Bus voltage is too high	08 FAULT
09	Bus soft start failed	09 FAULT
51	Over current or surge	51 FAULT
52	Bus voltage is too low	52 FAULT
53	Inverter soft start failed	53 FAULT
55	Over DC voltage in AC output	55 FAULT
57	Current sensor failed	57 FAULT
58	Output voltage is too low	58 FAULT
59	PV voltage is over limitation	59 FAULT

5.7 Warning Indicator

Warning Code	Warning Event	Audible Alarm	Icon flashing
01	Fan is locked when inverter is on.	Beep three times every second	01 ⚠
03	Battery is over-charged	Beep once every second	03 ⚠

04	Low battery	Beep once every second	04
07	Overload	Beep once every 0.5 second	07 LOAD 25 50 75 100
09	Display communication loss	None	09
10	Output power derating	Beep twice every 3 seconds	10
15	PV energy is low.	Beep twice every 3 seconds	15
BP	Battery is not connected	None	bP
EQ	Battery equalization	None	EQ

5.8 BMS communication Warning code reference

Warning Code	Description
60 60	If battery status is not allowed to charge and discharge after the communication between the inverter and battery is successful,it will show code 60 to stop charging and discharging battery
61 61	Communication lost (only available when the battery type is setting as "lithium battery", .) ● After battery is connected, communication signal is not detected for 3 minutes, buzzer will beep. After 10 minutes, inverter will stop charging and discharging to lithium battery. ● Communication lost occurs after the inverter and battery is connected successfully, buzzer beeps immediately.
62 62	Internal communication failure in batteries.
69 69	If battery status is not allowed to charge after the communication between the inverter and battery is successful,it will show code 69 to stop charging battery.
70 70	If battery status must to be charged after the communication between the inverter and battery is successful,it will show code 70 to charge battery.
71 71	If battery status is not allowed to discharge after the communication between the inverter and battery is successful,it will show code 71 to stop discharging battery.

6 SPECIFICATIONS

Table 1 Line Mode Specifications

LINE MODE	3.5KVA/3.5KW	5.5KVA/5.5KW
Input Voltage Waveform	Sinusoidal (utility or generator)	
Nominal Input Voltage	230Vac	
Low Loss Voltage	170Vac±7V (UPS); 90Vac±7V (Appliances)	
Low Loss Return Voltage	180Vac±7V (UPS); 100Vac±7V (Appliances)	
High Loss Voltage	280Vac±7V	
High Loss Return Voltage	270Vac±7V	
Max AC Input Voltage	300Vac	
Nominal Input Frequency	50Hz / 60Hz (Auto detection)	
Low Loss Frequency	40±1Hz	
Low Loss Return Frequency	42±1Hz	
High Loss Frequency	65±1Hz	
High Loss Return Frequency	63±1Hz	
Output Short Circuit Protection	Circuit Breaker	
Efficiency (Line Mode)	>95% (Rated R load, battery full charged)	
Transfer Time	10ms typical (UPS); 20ms typical (Appliances)	
Output power derating: When AC input voltage drops to 170V, the output power will be derated.	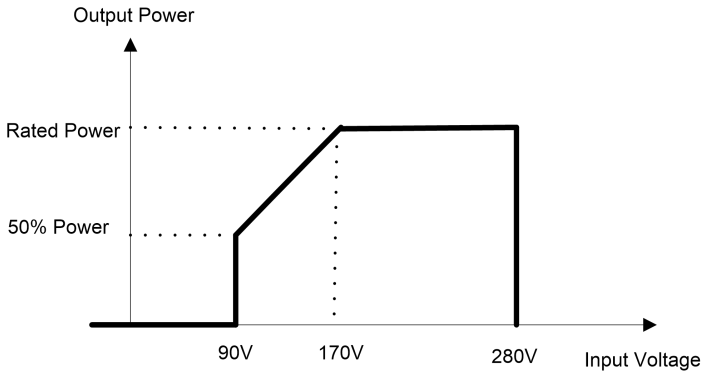	

Table 2 Inverter Mode Specifications

INVERTER MODE	3.5KVA/3.5KW	5.5KVA/5.5KW
Rated Output Power	3.5KVA/3.5KW	5.5KVA/5.5KW
Output Voltage Waveform	Pure Sine Wave	
Output Voltage Regulation	230Vac±3%	
Output Frequency	50Hz	
Peak Efficiency	94%	
Overload Protection	5s@≥150% load; 10s@110%~150% load	
Surge Capacity	2* rated power for 5 seconds	
Nominal DC Input Voltage	24Vdc	48Vdc
Cold Start Voltage	23.0Vdc	46.0Vdc
Low DC Warning Voltage @ load < 50% @ load ≥ 50%	 23.0Vdc 22.0Vdc	 46.0Vdc 44.0Vdc
Low DC Warning Return Voltage @ load < 50% @ load ≥ 50%	 23.5Vdc 23.0Vdc	 47.0Vdc 46.0Vdc
Low DC Cut-off Voltage @ load < 50% @ load ≥ 50%	 21.5Vdc 21.0Vdc	 43.0Vdc 42.0Vdc
High DC Recovery Voltage	32Vdc	62Vdc
High DC Cut-off Voltage	33Vdc	63Vdc
No Load Power Consumption	<30W	<40W

Table 3 Charge Mode Specifications

Utility Charging Mode			
INVERTER MODEL		3.5KVA/3.5KW	5.5KVA/5.5KW
Charging Algorithm		3-Step	
AC Charging Current (Max)		80Amp @$V_{I/P}$=230Vac	80Amp @$V_{I/P}$=230Vac
Bulk Charging Voltage	Flooded Battery	29.2	58.4
	AGM / Gel Battery	28.2	56.4
Floating Charging Voltage		27Vdc	54Vdc
Charging Curve		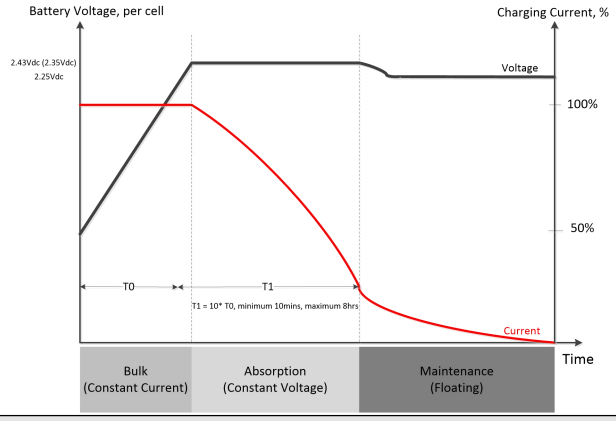	
MPPT Solar Charging Mode			
INVERTER MODEL		3.5KVA/3.5KW	5.5KVA/5.5KW
Max. PV Array Power		4000W	6000W
PV Array MPPT Voltage Range		120~450Vdc	
Max. PV Array Open Circuit Voltage		495Vdc	
Max Charging Current (AC charger plus solar charger)		100Amp	100Amp

Table 4 General Specifications

	3.5KVA/3.5KW	5.5KVA/5.5KW
Safety Certification	CE	
Operating Temperature Range	-10°C to 50°C	
Storage temperature	-15°C~ 60°C	
Humidity	5% to 95% Relative Humidity (Non-condensing)	
Dimension (D*W*H), mm	120 x 322 x 416	
Net Weight, kg	9	10

7 TROUBLE SHOOTING

Problem	LCD/LED/Buzzer	Explanation / Possible cause	What to do
Unit shuts down automatically during startup process.	LCD/LEDs and buzzer will be active for 3 seconds and then complete off.	The battery voltage is too low (<1.91V/Cell)	1. Re-charge battery. 2. Replace battery.
No response after power on.	No indication.	1. The battery voltage is far too low. (<1.4V/Cell) 2. Internal fuse tripped.	1. Contact repair center for replacing the fuse. 2. Re-charge battery. 3. Replace battery.
Mains exist but the unit works in battery mode.	Input voltage is displayed as 0 on the LCD and green LED is flashing.	Input protector is tripped	Check if AC breaker is tripped and AC wiring is connected well.
	Green LED is flashing.	Insufficient quality of AC power. (Shore or Generator)	1. Check if AC wires are too thin and/or too long. 2. Check if generator (if applied) is working well or if input voltage range setting is correct. (UPS→Appliance)
	Green LED is flashing.	Set "Solar First" as the priority of output source.	Change output source priority to Utility first.
When the unit is turned on, internal relay is switched on and off repeatedly.	LCD display and LEDs are flashing	Battery is disconnected.	Check if battery wires are connected well.
Buzzer beeps continuously and red LED is on.	Fault code 07	Overload error. The inverter is overload 110% and time is up.	Reduce the connected load by switching off some equipment.
	Fault code 05	Output short circuited.	Check if wiring is connected well and remove abnormal load.
		Temperature of internal converter component is over 120°C.	Check whether the air flow of the unit is blocked or whether the ambient temperature is too high.
	Fault code 02	Internal temperature of inverter component is over 100°C.	
	Fault code 03	Battery is over-charged.	Return to repair center.
		The battery voltage is too high.	Check if spec and quantity of batteries are meet requirements.

	Fault code 01	Fan fault	Replace the fan.
	Fault code 06/58	Output abnormal (Inverter voltage below than 190Vac or is higher than 260Vac)	1. Reduce the connected load. 2. Return to repair center
	Fault code 08/09/53/57	Internal components failed.	Return to repair center.
	Fault code 51	Over current or surge.	Restart the unit, if the error happens again, please return to repair center.
	Fault code 52	Bus voltage is too low.	
	Fault code 55	Output voltage is unbalanced.	

8 Appendix Ⅰ :Approximate Back-up Time Table

Model	Load (VA)	Backup Time @ 24Vdc 100Ah (min)	Backup Time @ 24Vdc 200Ah (min)
3.5KW	300	450	1101
	600	223	526
	900	124	304
	1200	96	228
	1500	69	165
	1800	57	127
	2100	49	109
	2400	36	95
	2700	32	75
	3000	29	68

Model	Load (VA)	Backup Time @ 48Vdc 100Ah (min)	Backup Time @ 48Vdc 200Ah (min)
5.5KW	500	614	1289
	1000	269	614
	1500	159	403
	2000	112	272
	2500	91	216
	3200	77	183
	3500	66	142
	4000	51	113
	4500	45	101
	5000	41	91

Note: Backup time depends on the quality of the battery, age of battery and type of battery. Specifications of batteries may vary depending on different manufact

9 Appendix Ⅱ：Parallel function

9.1 Introduction

This inverer can be used in parallel.Parallel operation in single phase is with up to 6 units. The supported maximum output power for 3.5KW is 21KW/21KVA. The supported maximum output power for 5.5KW is 33KW/33KVA. The supported maximum output power for 8KW is 48KW/48KVA.The supported maximum output power for 11KW is 66KW/66KVA.

NOTE: If this unit is bundled with share current cable and parallel cable, this inverter is default supported parallel operation. You may skip section 9.3. If not, please purchase parallel kit and install this unit by following instruction from professional technical personnel in local dealer.

9.2 Package Contents

In parallel kit, you will find the following items in the package:

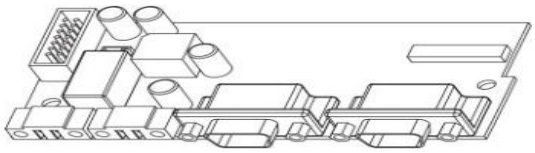

Parallel board

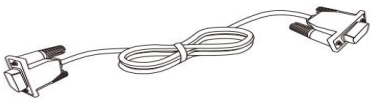

Parallel communication cable

Current sharing cable

9.3 Parallel board installation

Step 1:Remove wire cover by unscrewing all screws.

Step 2:Install new parallel board with 3 screws tightly.

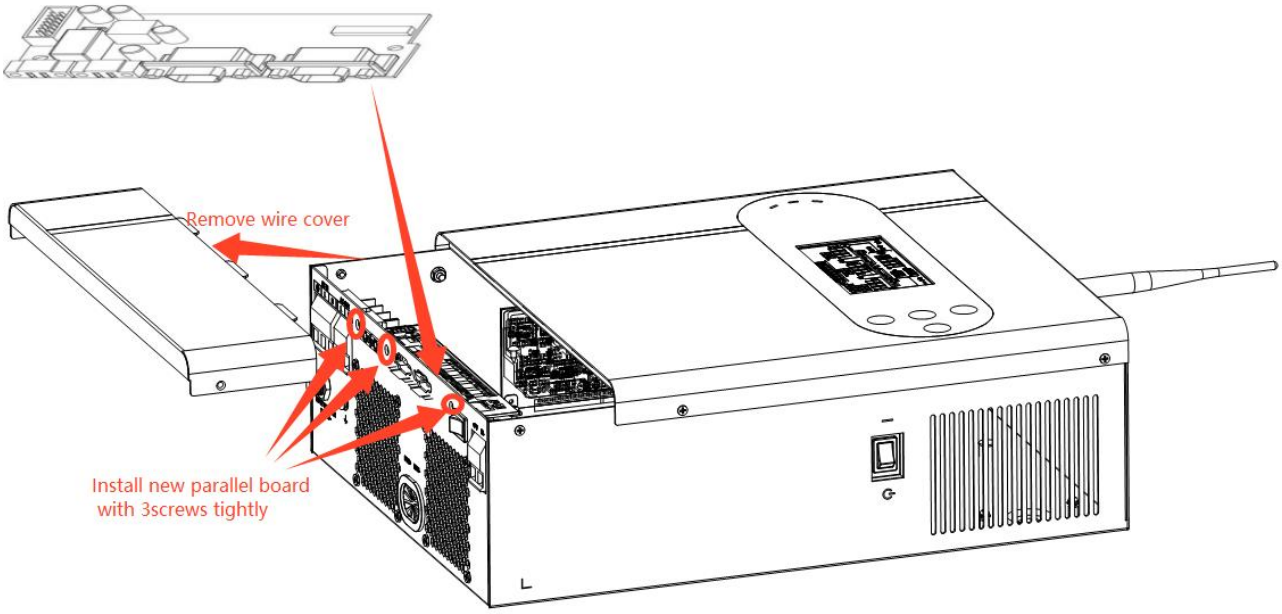

Step 3:Connect the internal signal cable (16Pin) to the parallel board

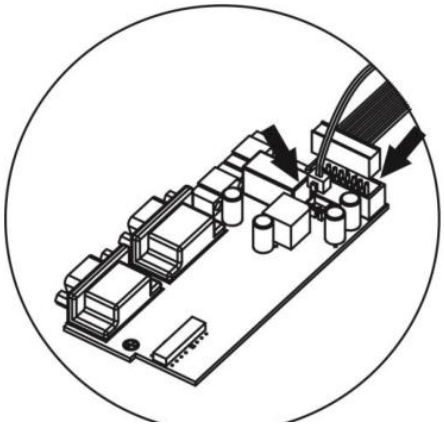

Step 4:Put wire cover back to the unit. Now the inverter is providing parallel operation function.

9.4 Mounting the Unit

Put wire cover back to the unit. Now the inverter is providing parallel operation function.

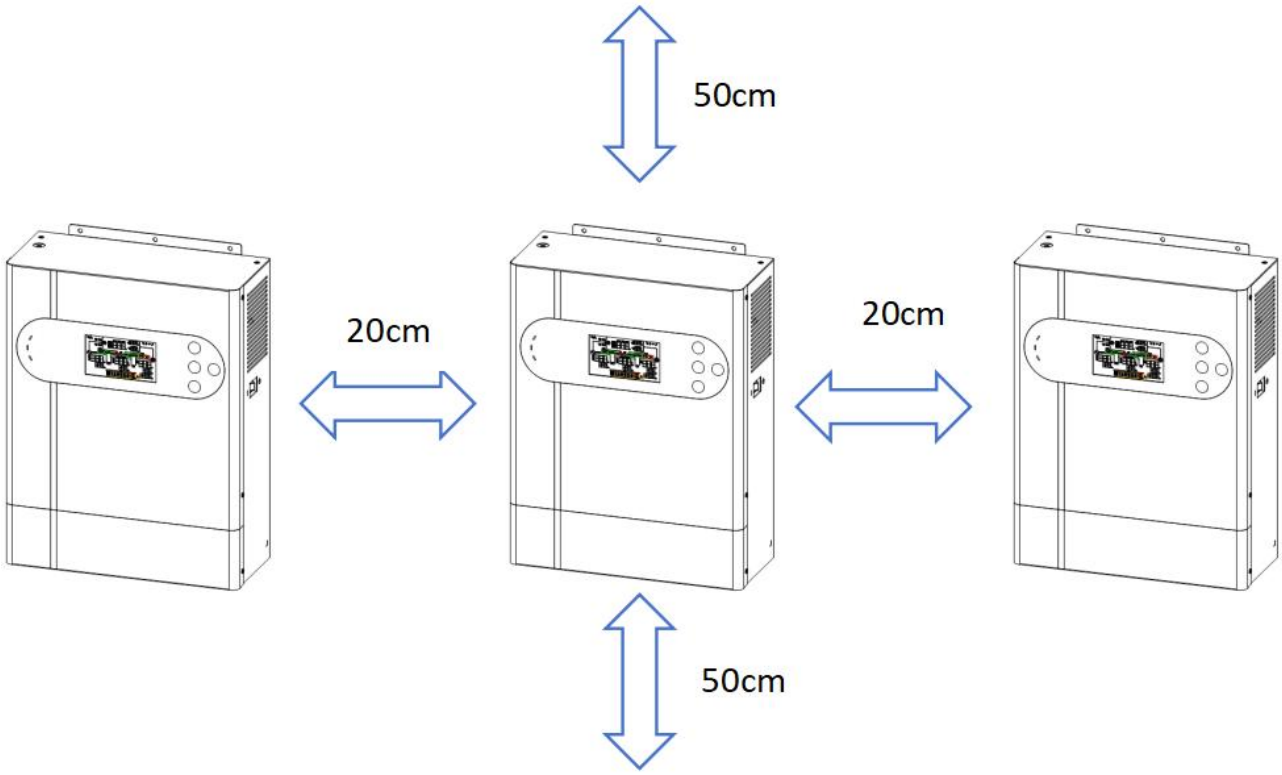

NOTE: For proper air circulation to dissipate heat, allow a clearance of approx 20 cm to the side and approx 50 cm above and below the unit. Be sure to install each unit in the same level.

9.5 Wiring Connection

NOTICE: It's requested to connect to battery for parallel operation.

The cable size of each inverter is shown as below:

Recommended battery cable and terminal size for each inverter:

Model	Wire Size	Ring Terminal			Torque value
		Cable (mm2)	Dimensions		
			D(mm)	L(mm)	
3.5KW	1*4AWG	22	6.4	33.5	2~ 3 Nm
5.5KW	1*2AWG or 2*6AWG	28	6.4	42.7	2~ 3 Nm

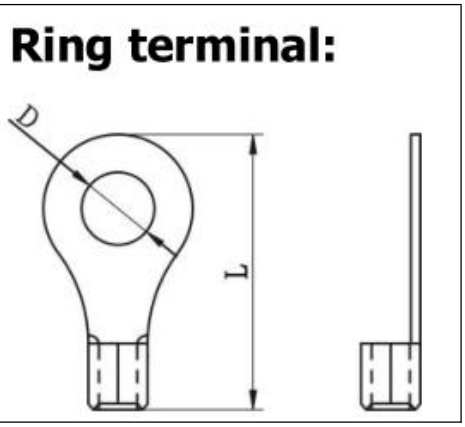

WARNING: Be sure the length of all battery cables is the same. Otherwise, there will be voltage difference between inverter and battery to cause parallel inverters not working.

Recommended AC input and output cable size for each inverter:

Model	AWG NO	Torque
3.5KW	12 AWG	1.2~ 1.6 Nm
5.5KW	10 AWG	1.2~ 1.6 Nm

You need to connect the cables of each inverter together. Take the battery cables for example: You need to use a connector or bus-bar as a joint to connect the battery cables together, and then connect to the battery terminal. The cable size used from joint to battery should be X times cable size in the tables above. “X” indicates the number of inverters connected in parallel.Regarding AC input and output, please also follow the same principle.

WARNING!! Make sure all output N wires of each inverter must be connected all the time. Otherwise, it will cause inverter fault in error code #72.

CAUTION!! Please install the breaker at the battery and AC input side. This will ensure the inverter can be securely disconnected during maintenance and fully protected from over current of battery or AC input. The recommended mounted location of the breakers is shown in the figures in 9-6.

Recommended breaker specification of battery for each inverter:

Model	1 UNIT*
3.5KW	100A/60VDC
5.5KW	150A/60VDC

*If you want to use only one breaker at the battery side for the whole system, the rating of the breaker should be X times current of 1 unit. “X” indicates the number of inverters connected in parallel.

Recommended breaker specification of AC input with single phase:

Model	2 units	3 units	4 units	5 units	6 units
3.5KW	80A/230VAC	120A/230VAC	160A/230VAC	200A/230VAC	240A/230VAC
5.5KW	100A/230VAC	150A/230VAC	200A/230VAC	250A/230VAC	300A/230VAC

Note1: Also, you can use 50A breaker for only 1 unit and install one breaker at its AC input in each inverter.
Note2: Regarding three-phase system, you can use 4-pole breaker directly and the rating of the breaker should be compatible with the phase current limitation from the phase with maximum units

Recommended battery capacity:

Inverter parallel numbers	2	3	4	5	6
Battery Capacity	400AH	600AH	800AH	1000AH	1200AH

WARNING! Be sure that all inverters will share the same battery bank. Otherwise, the inverters will transfer to fault mode.

9.6 Parallel Operation in Single phase

Two inverters in parallel:

Power Connection

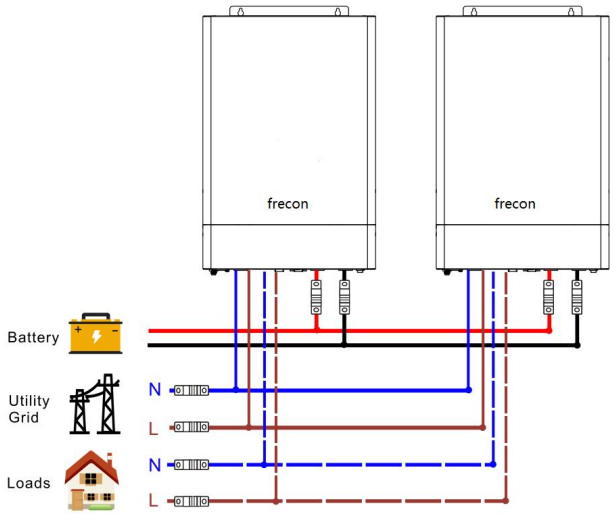

Communication Connection

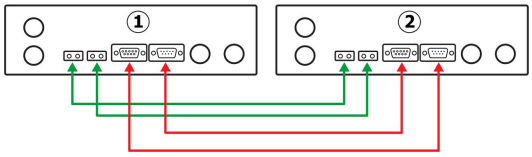

Three inverters in parallel:

Power Connection

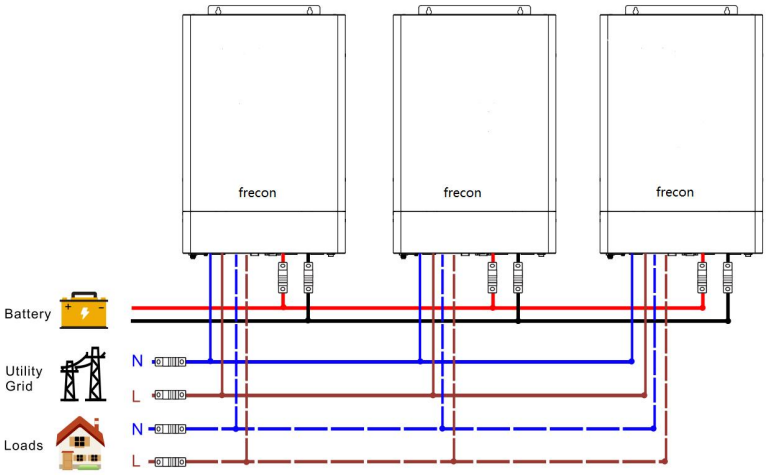

Communication Connection

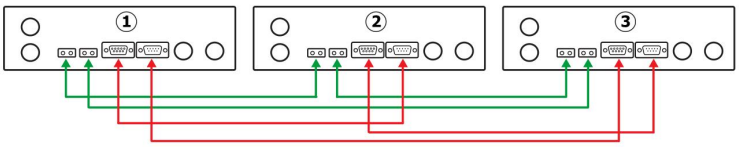

Four inverters in parallel:

Power Connection

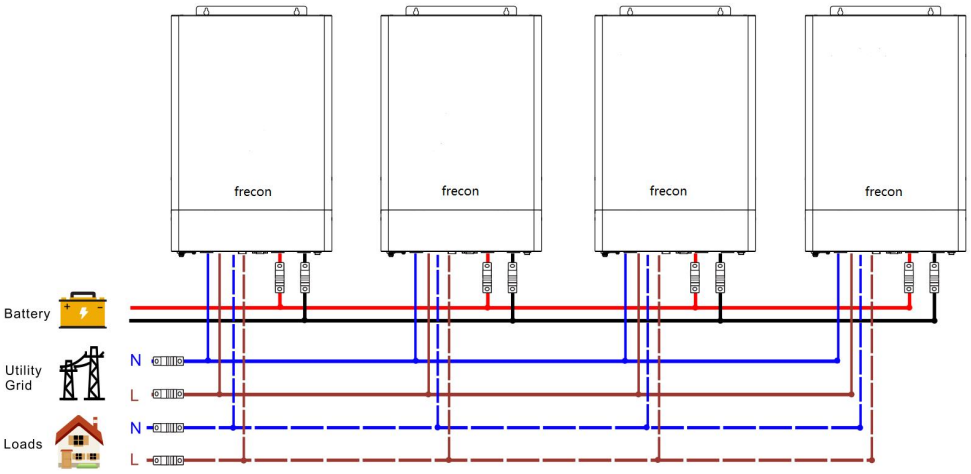

Communication Connection

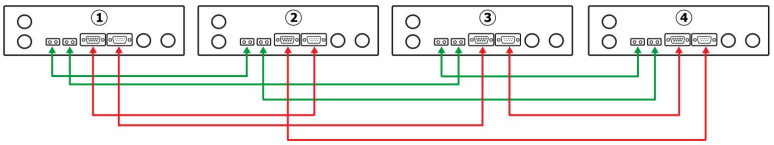

Five inverters in parallel:

Power Connection

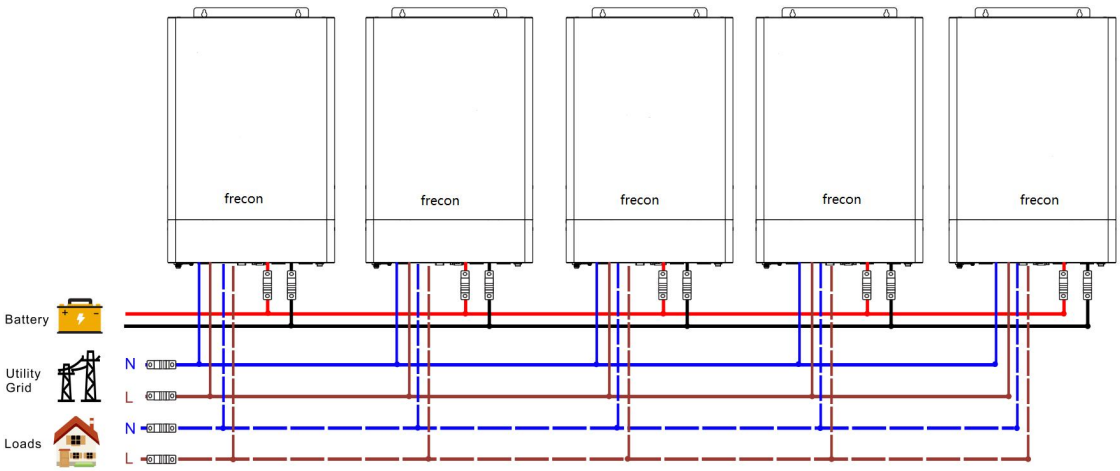

Communication Connection

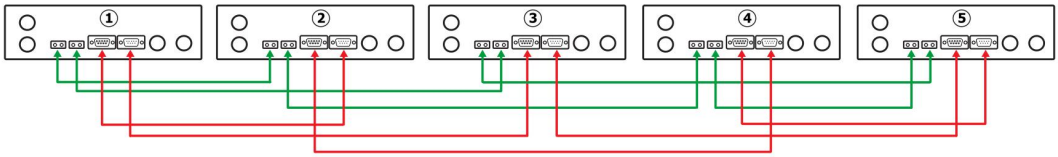

Six inverters in parallel:

Power Connection

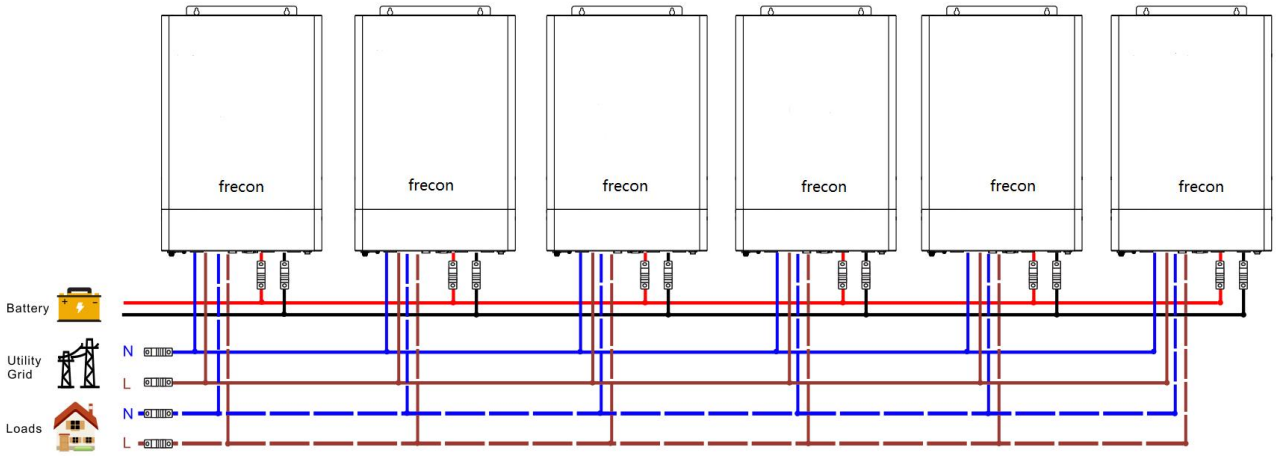

Communication Connection

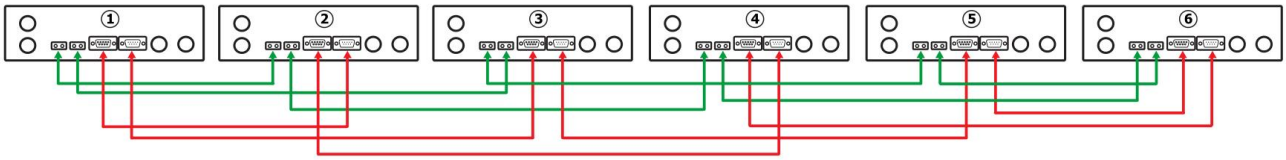

9.7 PV Connection

Please refer to user manual of single unit for PV Connection.

CAUTION: Each inverter should connect to PV modules separately.If multiple inverter PV inputs are connected to the same PV module; The inverter will be damaged

9.8 LCD Setting and Display

Setting Program:

Program	Description	Selectable option	
28	AC output mode *This setting is only available when the inverter is in standby mode (Switch off).	Single: This inverter is used in single phase application. 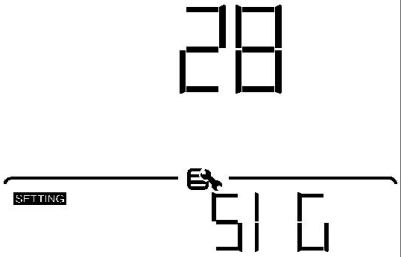	Parallel: This inverter is operated in parallel system. 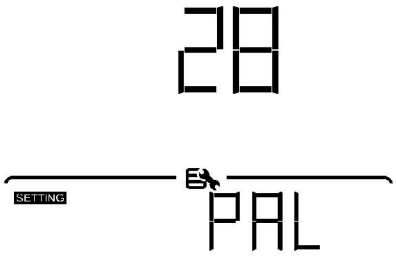

Fault code display:

Fault Code	Fault Event	Icon on
60	Power feedback protection	

71	Firmware version inconsistent	71 FAULT
72	Current sharing fault	72 FAULT
80	CAN fault	80 FAULT
81	Host loss	81 FAULT
82	Synchronization loss	82 FAULT
83	Battery voltage detected different	83 FAULT
84	AC input voltage and frequency detected different	84 FAULT
85	AC output current unbalance	85 FAULT
86	AC output mode setting is different	86 FAULT

9.9 Comminssioning

Parallel in single phase

Step 1:Check the following requirements before commissioning:

A. Correct wire connection

B. Ensure all breakers in Line wires of load side are open and each Neutral wires of each unit are connected together.

Step 2：Switch on all AC breakers of Line wires in AC input. Set “PAL” in LCD setting program 28 of each unit. And then Switch on all AC breakers of Line wires in AC input.

CAUTION: Do not turn on the power switch until the inverter is set to “PAL”.

Step 3：Turn on each unit.

LCD display in Master unit	LCD display in Slave unit
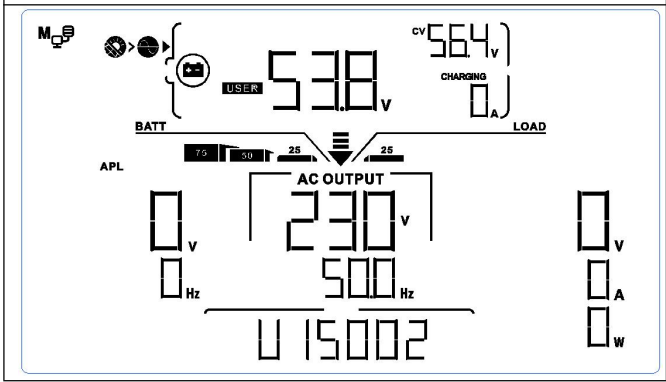	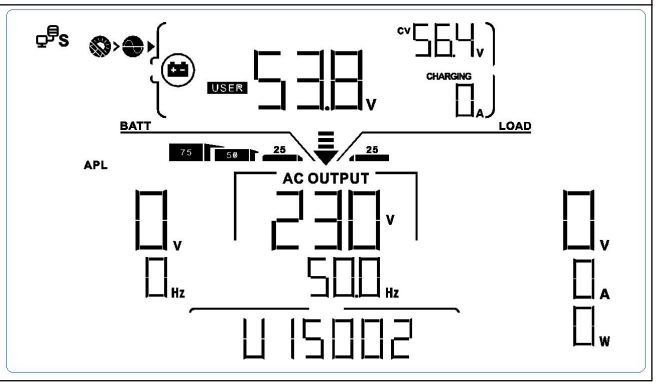

NOTE: Master and slave units are randomly defined.

Step 4: Switch on all AC breakers of Line wires in AC input.

It’s better to have all inverters connect to utility at the same time. If not, it will display fault 84 in following-order inverters. However, these inverters will automatically restart. If detecting AC connection, they will work normally.

LCD display in Master unit	LCD display in Master unit
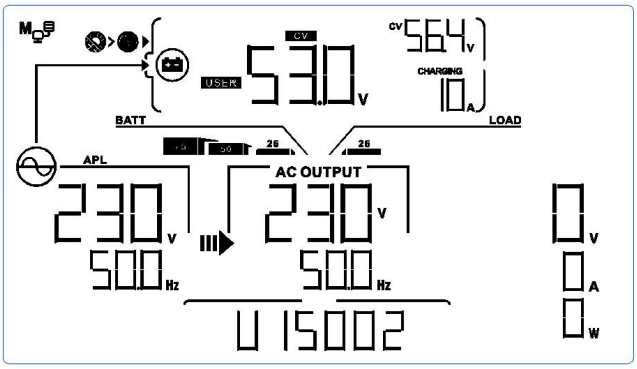	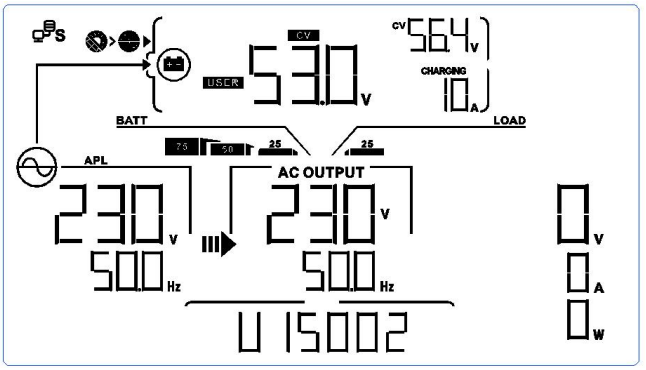

Step 5: If there is no more fault alarm, the parallel system is completely installed.

Step 6: Please switch on all breakers of Line wires in load side. This system will start to provide power to the load.

9.10 Parallel Trouble shooting

Situation		Solution
Fault Code	Fault Event Description	
60	Current feedback into the inverter is detected.	1. Restart the inverter. 2. Check if L/N cables are not connected reversely in all inverters. 3. For parallel system in single phase, make sure the sharing are connected in all inverters.For supporting three-phase system, make sure the sharing cables are connected in the inverters in the same phase, and disconnected in the inverters in different phases. 4. If the problem remains, please contact your installer.
71	The firmware version of each inverter is not the same.	1. Update all inverter firmware to the same version. 2. Check the version of each inverter via LCD setting and make sure the CPU versions are same. If not, please contact your installer to provide the firmware to update. 3. After updating, if the problem still remains, please contact your installer.
72	The output current of each inverter is different.	1. Check if sharing cables are connected well and restart the inverter. 2. If the problem remains, please contact your installer.
80	CAN data loss	1. Check if communication cables are connected well and restart the inverter. 2. If the problem remains, please contact your installer.
81	Host data loss	
82	Synchronization data loss	
83	The battery voltage of each inverter is not the same.	1. Make sure all inverters share same groups of batteries together. 2. Remove all loads and disconnect AC input and PV input. Then, check battery voltage of all inverters. If the values from all inverters are close,please check if all battery cables are the same length and same material type. Otherwise, please contact your installer to provide SOP to calibrate battery voltage of each inverter. 3. If the problem still remains, please contact your installer.
84	AC input voltage and frequency are detected different.	1. Check the utility wiring conncetion and restart the inverter. 2. Make sure utility starts up at same time. If there are breakers installed between utility and inverters, please be sure all breakers can be turned on AC input at same time. 3. If the problem remains, please contact your installer.
85	AC output current unbalance	1. Restart the inverter. 2. Remove some excessive loads and re-check load information from LCD of inverters. If the values are different, please check if AC input and output cables are in the same length and material type. 3. If the problem remains, please contact your installer.
86	AC output mode setting is different.	1. Switch off the inverter and check LCD setting #28. 2. For parallel system in single phase, make sure no 3P1, 3P2 or 3P3 is set on #28.For supporting three-phase system, make sure no “PAL” is set on #28. 3. If the problem remains, please contact your installer.

Online Monitoring

Download the Android app from https://solar.siritech.net/downloads or request to solar@siritech.net .

1. Account Registration:

To register an account, you must use an email address. Typically, you need to fill in the agent code. If you don't have one, input the default code.

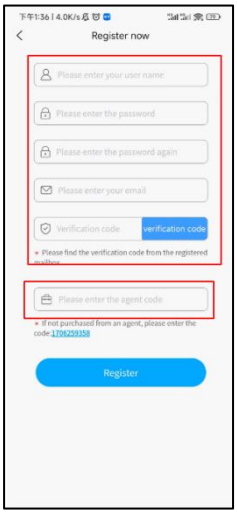

2.Reset the inverter WIFI

2.1 Press and hold the enter key for three seconds

2.2 Press the UP key to switch to parameter 37

2.3 Press ENTER to select parameter 37

2.4 press UP or DOWN key to switch parameter

2.5 changed parameter to

then press ENTER key to save it

3.APP connect guide

3.1.Open RCS APP then enter account and password to log in

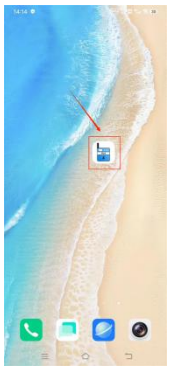

3.2 Click on list and select off grid equipment

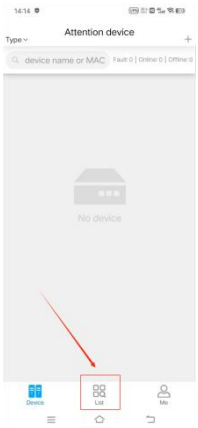

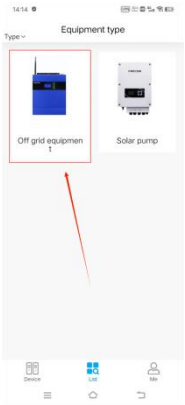

3.3 Click Configure Network and then click Continue

3.4 Enter the WIFI password and click start

3.5 Wait for the connection to complete and click OK after the connection is completed.

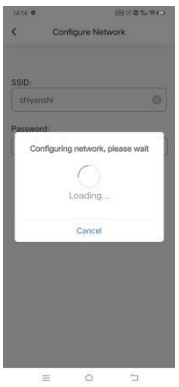

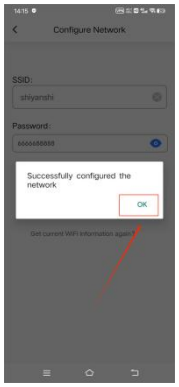

3.6 After the connection is completed, you can click the inverter icon to monitor and modify the inverter parameters.

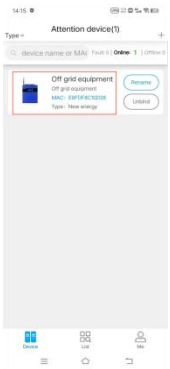

Note:- At present, this App is only for monitoring purpose. Accuracy of the data showing in this app purely based on INTERNET speed.

Document number: 31.05.0184
Version: 1.0
Date of release: 2024-07-08

Siri Technofabs
#3 OPP.PES College
BSK 1st Stage
Bangalore 560050
Karnataka, India
solar@siritech.net
www.siritech.net